We protect what matters most™

Version 2.2

LIQUID-APPLIED ROOFING

Manual

gaf.com/coatings

GAF Liquid-Applied Roofing

TABLE OF CONTENTS

Welcome 4

Section 1: Guides

Product Guide 7
Cleaner & Primer Guide 9
Seam Treatment Guide 10
Spray Guide 12
Guarantee/Warranty 16

Section 2: Substrate Preparation

General Substrate Conditions 18
Moisture Survey 18

Repair

Damaged Substrate Treatment: Metal 19
Damaged Substrate Treatment: Non-Metal 20

Cleaning Procedures

Treatment 21

General Substrate Preparation

Metal 22
Spray Polyurethane Foam 25
TPO 26
PVC 27
EPDM 28
Smooth & Granulated Asphaltic 29
Structural Concrete 30

Adhesion Testing

Field Peel Adhesion 31

Section 3: Quick Spec Directory

Acrylic **33**

Over Metal 34
Over Aged TPO 35
Over Aged PVC 36
Over EPDM 37
Over Smooth Asphaltic 38
Over Granulated Asphaltic 39
Over Structural Concrete 40
Over Corrugated Structural Transite Panels 41
Over Spray Polyurethane Foam 42

Diathon **43**

Over Spray Polyurethane Foam 44

Premium Acrylic HydroStop® Fabric Reinforced **45**

Over Smooth Asphaltic 46
Over Granulated Asphaltic 47
Over Aged TPO 48
Over Aged PVC 49
Over EPDM 50
Over Structural Concrete 51
Over Corrugated Structural Transite Panels 52
Over Polyisocyanurate (Polyiso) 53
Over Gypsum Roof Board 54
Warranty/Guarantee Extension/Renewal 55

TABLE OF CONTENTS

Silicone: Unisil **56**
Over Metal 57
Over Aged PVC 58
Over EPDM 59
Over Smooth Asphaltic 60
Over Granulated Asphaltic 61
Over Structural Concrete 62
Over Corrugated Structural Transite Panels 63
Over Spray Polyurethane Foam 64
Over Aged TPO 65
Silicone: High Solids **66**
Over Metal 67
Over Aged PVC 68
Over EPDM 69
Over Smooth Asphaltic 70
Over Granulated Asphaltic 71
Over Structural Concrete 72
Over Corrugated Structural Transite Panels 73
Over Spray Polyurethane Foam 74
Over Aged TPO 75
Polyurethane: Elastuff® 101 With Elastuff® 103 **76**
Over Metal 77
Over Smooth Asphaltic 78
Over Granulated Asphaltic 79
Over Structural Concrete 80
Over Corrugated Structural Transite Panels 81
Over Spray Polyurethane Foam 82
Over EPDM 83
Over Aged TPO 84
SEBS: Surface Seal SB **85**
Over Metal 86
Over EPDM 87
Over Smooth Asphaltic 88
Over Granulated Asphaltic 89
Over Structural Concrete 90

Section 4: Care & Preventative Maintenance

Overview 92
General Care & Preventative Maintenance Recommendations 92
Semi-Annual Inspections 93
Inspection Checklist 95
Roof Specific Leak Investigation 96
Emergency Repairs 96
Roof Alterations 97

Section 5: Architectural Detail Drawings

3-Coursed Details **99**
LAR-106A Seam Flashing – Ribbed Panels 100
LAR-106B Seam Flashing – Corrugated Panels 101
LAR-106C Seam Flashing – Standing Seam Panels 102
LAR-106D Seam Flashing – J Panels 103
LAR-106E Seam Flashing – Ribbed J-Panels 104
LAR-110 Ridge Cap (Elevated) 105
LAR-202 Metal Roof Edge Fascia Cap 106
LAR-302 Wall Flashing – Over Non-Metal Systems 107
LAR-303 General Equipment Curb Flashing 108
LAR-307 Skylight Curb 109
LAR-309 HVAC Curb/Scuttle Hatch Flashing 110
LAR-401 Control Joint – Concrete Deck 111
LAR-502 Pipe Flashing – Over Sprayed Polyurethane Foam 112
LAR-503 Pipe Flashing 113
LAR-506 Penetration Pocket – Double Penetration 114
LAR-510 Fabric Reinforced Drain 115
LAR-512 New Installation Drain Sump Flashing – Over Sprayed Polyurethane Foam 116
LAR-517 Flush Skylight 117
Silicone Details (Unreinforced) **118**
LAR-106A Seam Flashing – Ribbed Panels 119
LAR-106B Seam Flashing – Corrugated Panels 120
LAR-106C Seam Flashing – Standing Seam Panels 121
LAR-106D Seam Flashing – J Panels 122
LAR-106E Seam Flashing – Ribbed J-Panels 123
LAR-110 Ridge Cap (Elevated) 124
LAR-202 Metal Roof Edge Fascia Cap 125
LAR-302 Wall Flashing – Over Non-Metal Systems 126
LAR-303 General Equipment Curb Flashing 127
LAR-307 Skylight Curb 128
LAR-309 HVAC Curb/Scuttle Hatch Flashing 129
LAR-401 Control Joint – Concrete Deck 130
LAR-502 Pipe Flashing – Over Sprayed Polyurethane Foam 131
LAR-503 Pipe Flashing 132
LAR-506 Penetration Pocket – Double Penetration 133
LAR-510 Fabric Reinforced Drain 134
LAR-512 New Installation Drain Sump Flashing – Over Sprayed Polyurethane Foam 135
LAR-517 Flush Skylight 136

WELCOME

Thank you for consulting Version 2.1 of the GAF Liquid-Applied Roofing Manual. This manual contains the latest information relating to the application of GAF's liquid-applied roofing sytems, and is based on our years of experience in the commercial roofing field. It has been prepared as a general guide to assist architects, engineers, roofing contractors, and owners in the use of our liquid-applied roofing systems. You can find further information at www.gaf.com, or contact GAF at (877-766-3411).

ABOUT GAF

As North America's largest roofing manufacturer, GAF proudly offers a comprehensive portfolio of award-winning, innovative roofing products for both residential and commercial properties. Supported by an extensive national network of certified contractors, GAF has built its reputation—and its success—on its steadfast commitment to Advanced Quality, Industry Expertise, and Solutions Made Simple.

GAF offers all major low-slope roofing technologies, including repair and maintenance products and roof restoration systems, as well as new roofing systems (BUR, modified bitumen, TPO, PVC, and liquid-applied systems). GAF has developed single-ply and asphaltic membranes with excellent durability and reflectivity (white or light colors only) to meet the most rigorous industry standards while helping commercial property owners and designers lower roof temperatures.

For more information about GAF, visit us at www.gaf.com.

SERVICES

- GAF has a network of field representatives to inspect its quality roofing systems throughout North America.
- GAF has a network of distributors to supply its quality roofing systems throughout North America.
- Our GAF Design Services representatives can provide information about specifications, application, code approvals, and product information. They can also provide a general specification for the approved GAF roofing system you identify, including product descriptions, application methods, and detail drawings based on the information you provided. The phone number for Design Service is 877-423-7663, option 4, option 3.
- Our Tapered Design Group (TDG) provides tapered insulation take-offs for architects, contractors, and distributors nationwide. Just send your roof plans and specifications to tdg@gaf.com. The phone number for TDG is 1-877-423-7663.
- Our CARE (Center for the Advancement of Roofing Excellence) program trains industry professionals in proper roofing techniques through professional, educational programs geared specifically to the roofing industry - given by experts in the roofing industry.
- Visit GAF on the web at www.gaf.com for extensive product information, specifications, and technical literature.

DISCLAIMER

- GAF manufactures and sells roofing materials and does NOT practice architecture or engineering. GAF is NOT responsible for the performance of its products when damage to its products is caused by such things as improper building design or construction flaws.
- The design responsibility remains with the architect, engineer, roofing contractor, or owner, and construction details illustrated and described herein are furnished solely for guidance purposes. These guidelines should not be construed as being all-inclusive, nor should they be considered a substitute for good application practices.
- Under no circumstances does GAF have any liability for costs or expenses arising out of or associated with the pre-existing presence of asbestos-containing materials or any other allegedly hazardous substances or materials on the roof to which the new GAF roofing materials are being applied.
- Information contained in this manual is presented in good faith and, to the best of GAF's knowledge, does not infringe upon any patents, foreign or domestic.
- As a part of its continuing efforts to improve the performance of its products, GAF periodically makes changes to its products and application specifications. The Company reserves the right to change or modify, at its discretion, any of the information, requirements, specifications or policies contained herein. This manual supersedes all catalogs and previous manuals.

GENERAL DESIGN CONSIDERATIONS

When installed on a new roof, a roof coating should:

- Be a component part of the roofing system. This will ensure compatibility with the system and enhance overall performance of the system.
- Be installed after the roof has weathered as necessary. Weathering periods may vary depending upon the type of system to which the coating will be applied. Use of a primer may also be required for certain substrates to ensure adequate adhesion.

When installed on an existing roof, a roof coating should:

- Be compatible with the existing roof.
- Help extend the life of the existing roof. Although a coating cannot add life back to a roof already beyond its service life, it can help prevent a roof from aging as quickly as it would without the coating.
- Only be applied to a roof that drains properly. Some coatings may be adversely affected by the presence of ponding water. Therefore, areas of the existing roof that pond water should be repaired prior to coating.
- Only be applied to non-leaking roofs. While coatings may help seal some pinhole leaks not visible to the naked eye, they will not generally find and repair existing leaks. Accordingly, existing roof leaks will need to be identified and repaired prior to coating. Allow repairs to fully dry prior to coating.

How to determine if a roof is a good candidate for coating:

- Perform an adhesion test to confirm the coating will adhere to substrate. The use of a primer may be required. See the Adhesion Testing section for additional information
- A Moisture Survey will reveal any wet substrate that will need to be replaced. If the moisure survey reveals that 25% or more of the roof area contains moisture, then a complete tear-off may be considered. See the Moisture Survey section for additional information.

SECTION 1
Guides

Product Guide

Type	Product	Description	Base/Cure	VOC (g/L)	% Solids by Volume[1]
Cleaners & Primers	SureBond Primer	Water-Based Acrylic Primer For Chaulky Surfaces.	Water-Based	<200	23
	Metal Roof Primer	Water-Based Acrylic Primer For Metal	Water-Based	<100	36
	EPDM Activator	Water-Based Rinsable Primer For EPDM	Water-Based	<5	n/a
	Epoxy Primer	Water-Based Epoxy Primer For Concrete and Porous Substrates	Water-Based	<100	10.4
	TPO Red Primer	Solvent-Based Primer For TPO Roofs	Solvent-Based	<5	1
	Lock-Down Primer	Moisture-Cure UrethanePrimer For Corrosion Protection On Metal Surfaces	Solvent-Based	<420	55
	UniBase Primer	Water-Based Acrylic Penetrating Primer and Asphalt Bleed Blocker	Water-Based	<50	40
	GAF Multi-Purpose Primer	Water-Based Epoxy Primer For Multiple Substrates	Water-Based	<50	42
	Bonding Primer	Solvent-Based Epoxy Penetrating Primer For Sealing Porous Surfaces	Two-Part	420	42
	Bleed-Block Asphalt Primer	Water-Based Acrylic Penetrating Primer and Asphalt Bleed Blocker for silicone	Water-Based	<50	53
	Cleaning Concentrate	Water-Based Roof, Wall and Deck Surface Cleaner	Water-Based	<25	n/a
Coatings	BarrierGuard® Surface Coating	Polymer-modified cement adhesion premoter	Water-Based	<50	39
	Diathon® Base Coating	Water-Based Acrylic Base Coat For Spray Polyurethane Foam	Water-Based	<25	52
	Diathon®	Water-Based Acrylic Top Coat For Spray Polyurethane Foam	Water-Based	<25	55
	Diathon® HT	High Tensile Water-Based Acrylic Top Coat For Spray Polyurethane Foam	Water-Based	<50	52
	Diathon® QS	Quick Set Water-Based Acrylic Top Coat For Spray Polyurethane Foam	Water-Based	<25	55
	Elastuff® 101 Base Roof Coating	Aromatic Polyurethane Base Coat	Solvent Based/ Moisture-Cure	<250	80
	Elastuff® 103 Roof Coating (Part A & B)	Aliphatic Polyurethane Top Coat	Two-Part	<250	58
	Kymax® Coating	PVDF Fluoropolymer Top Coat	Water-Based	<50	36
	Premium Acrylic HydroStop® Base Coat	Water-Based Acrylic Base Coat	Water-Based	<100	51
	Premium Acrylic HydroStop® Base Coat LV	Water-Based Acrylic Base Coat	Water-Based	<50	51
	Acrylic Base Coat	Water-Based Acrylic Base Coat	Water-Based	<25	52
	Acrylic Top Coat	Water-Based Acrylic Top Coat	Water-Based	<25	53
	High Tensile Acrylic Top Coat	High Tensile Water-Based Acrylic Top Coat	Water-Based	<25	52
	Acrylic QS Top Coat	Quick Set Acrylic Top Coat	Water-Based	<5	2
	Premium Acrylic HydroStop® Top Coat	Water-based Acrylic Top Coat	Water-Based	<25	52

[1] Value is approximate and subject to normal manufacturing variations. This value is not guaranteed and is provided solely as a guide.

Product Guide (Continued)

Type	Product	Description	Base/Cure	VOC (g/L)	% Solids by Volume[1]
Coatings	WOB Acrylic TopCoat®	Water-based Coating Without Biocides	Water-Based	<50	58
	Surface Seal SB Roof Coating	Solvent-Based Thermoplastic Coating	Solvent-Based	550	50
	Unisil HS Roof Coating	High Solids Silicone Coating	Moisture-Cure	<50	97
	High Solids Silicone	High Solids Silicone Coating	Moisture-cure	<50	97
	Unisil Roof Coating	Solvent-Based Silicone Coating	Solvent-Based	<250	71
Achitectural & Wall	FlexCoat Wall Coating	Water-Based Coating For Masonry Walls	Water-Based	<15	55
	CanyonTone™ Clear Wall Coating	Clear Coat For Concrete, Brick, and Masonry Walls	Water-Based	<125	5
	CanyonTone™ Stain	For Concrete, Brick, and Masonry Walls	Water-Based	<100	24
	Elastuff® 120 Coating Part A Roller Grade	Two-Part Urethane Coating	Two-Part	<5	100
	Elastuff® 120 Coating Part B Spray Grade	Two-Part Urethane Coating	Two-Part	<5	100
	TrafficCoat Pedestrian Surface Coating (Smooth)	Water-Based Epoxy Modified Coating	Water-Based	<50	34
	TrafficCoat Pedestrian Surface Coating (Textured)	Water-Based Epoxy Modified Textured Coating	Water-Based	<50	41
	Sky-Lite	Clear Solvent-based synthetic rubber sealer for skylights	Solvent-Based	<550	37
Flashing, Sealants & Accessories	FlexSeal™ Caulk Grade Sealant	Elastomeric Sealant	Solvent-Based	<300	75
	FlexSeal™ Sealant	Self-Leveling Elastomeric Sealant	Solvent-Based	<300	66
	RepairPro Sealant	Self-Leveling Elastomeric Sealant	Solvent-Based	<300	66
	RepairPro Trowel Grade	Vertical Grade Fiber Reinforced Elastomeric Sealant	Solvent-Based	<300	59
	Silicone Mastic	Silicone Sealant	Moisture-Cure	<50	97
	Premium Brush Grade Acrylic Flashing	Water-Based Acrylic Flashing	Water-Based	<25	58
	Premium Fabric	Non-Woven Stitch-Bond Polyester Reinforcement	n/a	n/a	n/a
	Metal Fastener Fabric	Circular Non-Woven, Stitch Bonded Polyester Fabric	n/a	n/a	n/a
	Repair Caps	Self-Adhering Aluminum Caps For Fasteners	n/a	n/a	n/a
	Bulking Fiber	Glass Fiber Bulking Agent	n/a	n/a	n/a
	RepairTape	Self-Adhering Woven Polyester Seam Tape	n/a	n/a	n/a
	SeamTape	Self-Adhering Woven Polyester Seam Tape	n/a	n/a	n/a

[1] Value is approximate and subject to normal manufacturing variations. This value is not guaranteed and is provided solely as a guide.

Cleaner & Primer Guide*

Substrate		Recommend Cleaning Concentrate	Premium Acrylic	Acrylic	Surface Seal (Solvent)	Unisil (Solvent)	High Solids Silicone	Elastuff®
Metal	Rusty Metal	Yes	Metal Roof Primer	Metal Roof Primer	Metal Roof Primer	No Primer	No Primer	Metal Roof Primer
	Non-Ferrous Metal (Aluminum, Copper etc.)	Yes	Bonding Primer	Bonding Primer	Bonding Primer	Bonding Primer	Bonding Primer	Bonding Primer
	Kynar Coated Metal	Yes	Multi-Purpose Primer	Multi-Purpose Primer	Multi-Purpose Primer	Multi-Purpose Primer	Multi-Purpose Primer	Multi-Purpose Primer
	Residual Asphalt	Yes	Multi-Purpose Primer	Multi-Purpose Primer	Multi-Purpose Primer	Bleed-Block Asphalt Primer	Bleed-Block Asphalt Primer	No Primer
Asphaltic (BUR, SBS, APP)	Smooth Asphaltic	Yes	Multi-Purpose Primer	Multi-Purpose Primer	Multi-Purpose Primer	Bleed-Block Asphalt Primer	Bleed-Block Asphalt Primer	No Primer
	Granulated Asphaltic	Yes	Multi-Purpose Primer	Multi-Purpose Primer	Multi-Purpose Primer	Multi-Purpose Primer	Multi-Purpose Primer	No Primer
Single-Ply	TPO (aged)	Yes	n/a	n/a	n/a	n/a	n/a	n/a
	PVC (aged)	Yes	Multi-Purpose Primer	Multi-Purpose Primer	n/a	Multi-Purpose Primer	Multi-Purpose Primer	n/a
	EPDM	No	EPDM Activator	EPDM Activator	EPDM Activator	EPDM Activator	EPDM Activator and Multi-Purpose Primer	n/a
Other	SPF	No	No Primer	No Primer	n/a	No Primer	No Primer	No Primer
	Structural Concrete	Yes	Epoxy Primer	Epoxy Primer	Bonding Primer	Multi-Purpose Primer	Multi-Purpose Primer	Bonding Primer
	Gypsum Roof Board	No	n/a	n/a	n/a	n/a	n/a	n/a
	Plywood	No	n/a	n/a	n/a	n/a	n/a	n/a
	Polyiso	No	n/a	n/a	n/a	n/a	n/a	n/a
	Existing Acrylic Coating	Yes	No Primer	No Primer	n/a	No Primer	Multi-Purpose Primer	n/a
	Existing Silicone Coating	Yes	n/a	n/a	n/a	No Primer	n/a	n/a
	Existing Aluminized Coating	Yes	*Contact Technical Sales Support at 1-877-423-7663*					
	Corrugated Structural Transite Panels	Yes	Epoxy Primer	Epoxy Primer	Bonding Primer	Multi-Purpose Primer	Multi-Purpose Primer	Bonding Primer

* Adhesion tests are required. If adhesion test results are less than 2.0 lb/in, a primer is recommended to promote adhesion. Refer to the Adhesion testing section within this manual.

Liquid-Applied Seam Treatment Guide

Substrate		Premium Acrylic/ Acrylic	Surface Seal	Unisil	High Solids Silicone	Elastuff®
		PRODUCT OPTIONS (CHOOSE ONE)				
Metal	**Horizontal Seams**	Premium Brush-Grade Acrylic Flashing w/ Premium Fabric	FlexSeal™ w/Premium Fabric	Silicone Mastic	Silicone Mastic	FlexSeal™ w/ Premium Fabric
		Seam Tape		Premium Brush-Grade Acrylic Flashing w/ Premium Fabric	Seam Tape	Seam Tape
				SeamTape		
	Vertical Seams [Overlap and Trapezoidal seams **MUST** be treated; other types can forgo treatment if the seal/tape is intact or if the seam is double locked.]	Premium Brush-Grade Acrylic Flashing	FlexSeal™	Silicone Mastic	Silicone Mastic	FlexSeal™
		SeamTape		Premium Brush-Grade Acrylic Flashing	Seam Tape	Seam Tape
				SeamTape		
Single-Ply	**TPO** [For enhanced system guarantees]	Premium Brush Grade Flashing	N/A	Silicone Mastic	Silicone Mastic	N/A
		Seam Tape		Premium Brush-Grade Acrylic Flashing		
				SeamTape	SeamTape	
	PVC [For enhanced system guarantees]	Premium Brush-Grade Acrylic Flashing	N/A	Silicone Mastic	Silicone Mastic	N/A
		Seam Tape		Premium Brush-Grade Acrylic Flashing	SeamTape	
				SeamTape		
	EPDM [For enhanced system guarantees]	Premium Brush-Grade Acrylic Flashing	FlexSeal™	Silicone Mastic	Silicone Mastic	N/A
		SeamTape		Premium Brush-Grade Acrylic Flashing	Seam Tape	
				SeamTape		
Asphaltic	**Smooth Asphaltic** [For enhanced system guarantees]	Premium Brush-Grade Acrylic Flashing	FlexSeal™	Silicone Mastic	Silicone Mastic	FlexSeal™
				Premium Brush-Grade Acrylic Flashing		
	Granulated Asphaltic [For enhanced system guarantees]	Premium Brush-Grade Acrylic Flashing	FlexSeal™	Silicone Mastic	Silicone Mastic	FlexSeal™
				Premium Brush-Grade Acrylic Flashing		

Liquid-Applied Seam Treatment Guide (continued)

Substrate		Premium Acrylic/ Acrylic	Surface Seal	Unisil	High Solids Silicone	Elastuff®
		PRODUCT OPTIONS (CHOOSE ONE)				
Other	**Spray Polyurethane Foam**	No Treatment	N/A	No Treatment	No Treatment	No Treatment
	Structural Concrete [Structural joints to be treated with backer rod and compatible sealant, then coated over with products listed here.]	Premium Brush-Grade Acrylic Flashing w/ Premium Fabric	FlexSeal™ w/ Premium Fabric	Silicone Mastic	Silicone Mastic	FlexSeal™ w/ Premium Fabric
		Seam Tape		Premium Brush-Grade Acrylic Flashing w/ Premium Fabric		Seam Tape
	Corrugated Structural Transite Panels	Premium Brush-Grade Acrylic Flashing w/ Premium Fabric	FlexSeal™ w/ Premium Fabric	Silicone Mastic	Silicone Mastic	FlexSeal™ w/ Premium Fabric
		SeamTape		Premium Brush-Grade Acrylic Flashing w/ Premium Fabric		Seam Tape

SPRAYER GUIDE

Overview:

This guide is an introduction to airless spray equipment setup and application of GAF single component elastomeric roof coatings. Spray application is an acceptable and efficient method for installing GAF roof coatings especially over larger areas. Care should be taken in following all spray equipment manufacturer safety guidelines. Additionally, the installer should follow safety guidelines published in the relevant Product Data Sheet and Safety Data Sheet (SDS)

Equipment

Larger equipment will help increase production capabilities and allow for extended hose sizes and lengths to be used. Flow rate, and most importantly, pressure are considerations with proper equipment choice. GAF coatings have a wide range of minimum pressure requirements in order to properly apply them using sprayer applications. Some less viscous products like cleaners and primers will have a pressure requirement of around 1,000 psi and other more viscous products like high solids silicone require 7,250 psi or the addition of a transfer pump to assist in application. A good, all round choice for sprayer specifications is something rated at 2.0-4.0 Gallons per Minute (GPM) and a maximum pressure of 3,000-4,000 psi. This type of configuration will be suitable for everything except high solids silicone. High solids silicone has a pressure requirement of 7,250 psi unless a transfer pump is added to the system. Note that not all coatings are the same. While a majority are water-based and require water clean up, some are solvent based and will require different steps for operation.

Fluid Hose

Hose selection should be rated for the maximum pressure the pump is rated for and also compatible with the type of product being sprayed. Generally, 250 ft configurations are recommended for most higher volume applications. Material viscosity should determine the size of hose selected and it is important to maximize the pressure at the gun. Larger diameter configurations will help keep delivery pressures maximized at the spray tip. Below are basic guidelines to follow:

Lower viscosity (thinner) materials like primers and acrylic roof coatings:

Lengths up to 75 ft, use 3/8" hose from pump to gun
Lengths up to 250 ft, add 100 ft of ½" hose from pump and remaining length of 3/8" hose to the gun

Higher viscosity (thicker) materials like high solids silicone and polyurethanes:

Lengths up to 75 ft, use ½" hose from pump to gun
Lengths up to 250 ft, add 100 ft of ¾" hose from pump and remaining length of ½" hose to gun

Guns and Tips:

The gun should be compatible with the spray equipment's pressure ratings and capable of using a reversible type tip. Spray tips are identified by a three-digit code. The first digit identifies how wide a pattern will be produced when the gun is held 12" from the roof surface. For example a "5" will produce a 10" wide pattern 12" from the surface. The second two numbers are the orifice size of the tip, in thousandths of an inch and this determines how much fluid will leave the spray tip. Thicker products will require a larger tip orifice. Refer to GAF's Spray Tip Chart for specific recommendations for each product.

Equipment Clean Up:

It is best practice to flush product from the spray system each day. Leaving material in hoses can allow coating to cure and cause downtime in order to troubleshoot the problem. It can also result in having to replace items such as pump packings, hoses, tips, etc, which can be costly. Always use the correct cleaning material that's listed on the Product Data Sheet. Below are general care guidelines based on product type:

Acrylic (water-based) Products:

Flush hoses each night with clean water until the material coming out is clear. For extended storage, use a diluted solution of water and GAF Cleaning Concentrate until all material is cleaned from the system. Then cap off hoses until next use.

Polyurethane Products:

Flush hoses each night with specified solvent listed on the Product Data Sheet until material coming out is clear. For extended storage, use the specified solvent until all material is cleaned from the system and then cap off the hoses until next use. Make sure that the hoses are compatible for long term solvent exposure. GAF's Polyurethanes are moisture sensitive and should not come in contact with any moisture in the spray system.

Silicone Products:

Flush hoses each night with Virgin Mineral Spirits or VM&P Naphtha until material coming out is transparent. *DO NOT USE PAINT THINNER OR OTHER NON APPROVED SOLVENTS*. For extended storage, use the specified solvent until all material is cleaned from the system and then cap off the hoses until next use. Make sure that the hoses are compatible for long term solvent exposure. GAF's silicones are moisture sensitive and should not come in contact with any moisture in the spray system.

Disclamier:

Contents of this guide are for general guidelines only. Always consult with equipment manufacturer for specific information regarding the proper set up, product compatibility, and operation of spray equipment. Contact GAF for specific product information if needed by the equipment manufacturer.

Sprayer Guide

Type	Product	Minimum Sprayer Requirements	Tip Size	Equipment Clean Up	Notes
Cleaners & Primers	Metal Roof Primer	0.5 GPM/1,000 psi	.015-.021	Water	
	EPDM Activator	0.5 GPM/1,000 psi	.013-.017	Water	Hudson Style agricultural sprayer can also be used
	Lock-Down Primer	0.5 GPM/1,000 psi	.015-.021	Xylene	Flammable. Refer to equipment manufacturer's grounding requirements
	Cleaning Concentrate	0.5 GPM/1,000 psi	.013-.017	Water	Hudson Style agricultural sprayer can also be used
	Epoxy Primer	0.5 GPM/1,000 psi	.015-.019	Water	
	Unibase Primer	0.5 GPM/1,000 psi	.015-.019	Water	
	Multi-Purpose Primer	2.0 GPM/2,500 psi	.021-.031	Water	Pot life when mixed is approximately 2 hours. Add 10% water to help with spraying
	Bonding Primer	0.5 GPM/1,000 psi	.015-.019	Xylene	Flammable. Refer to equipment manufacturer's grounding requirements
Roof Coatings	Premium Acrylic Hydrostop Top Coat	1.0 GPM/2,000 psi	.027-.039	Water	
	Premium Acrylic Hydrostop Base Coat	1.0 GPM/2,000 psi	.027-.039	Water	
	Unisil	2.5 GPM/3,500 psi	.029-.051	VM&P Naphtha	Flammable. Refer to equipment manufacturer's grounding requirements
	High Solids Silicone	2.5 GPM/7,250 psi	.029-.051	VM&P Naphtha	Flammable. Refer to equipment manufacturer's grounding requirements. Transfer pump may be required for lower rated pumps.
	Acrylic Base Coat, Acrylic Top Coat, High-Tensile Acrylic	1.0 GPM/2,000 psi	.027-.039	Water	
	Surface Seal SB	2.0 GPM/2,500 psi	.027-.039	Mineral Spirits	Flammable. Refer to equipment manufacturer's grounding requirements
	Elastuff 101	2.0 GPM/2,500 psi	.027-.039	Xylene	Flammable. Refer to equipment manufacturer's grounding requirements
	Elastuff 103	2.0 GPM/2,500 psi	.027-.039	Xylene	Flammable. Refer to equipment manufacturer's grounding requirements

Sprayer Guide

Type	Product	Minimum Sprayer Requirements	Tip Size	Equipment Clean Up	Notes
Wall & Specilaty Coatings	Kymax	1.0 GPM/2,000 psi	.015-.021	Water	
	Flexcoat	1.0 GPM/2,000 psi	.021-.031	Water	
	Traffic Coat Smooth	0.5 GPM/1,000 psi	.015-.021	Water	
	CanyonTone Clear	0.5 GPM/1,000 psi	.013-.017	Water	Hudson Style agricultural sprayer can also be used
	CanyonTone Stain	0.5 GPM/1,000 psi	.015-.021	Water	

Enhanced Guarantees/Warranties Guide

		Emerald Pledge™[1]			Diamond Pledge™[1]		
		10 yr	15 yr	20 yr	10 yr	15 yr	20 yr
Who can offer?							
	Customers that are not part of GAF's Certified Contractor Program	No			No		
	CoatingsPRO™	Yes			No		
	CoatingsPRO+™	Yes			Yes		
Requirements							
	Moisture Survey for Non-Metal Roofs	Yes			Yes		
	Pre-Inspection/Approval	No			Yes, for jobs over 20k sq.ft.		
	Interim Inspection	No			Yes		
	Final Inspection	No			Yes		
	Warranty/Guarantee Registration	Yes			Yes		
Coverage[3]							
	Manufacturing Defects	Yes			Yes		
	Ordinary Wear & Tear	No			Yes		
	Transferrable	Yes[2]			Yes		
	Workmanship	No			Yes		
Remedy[3]							
	Materials	Yes			Yes		
	Labor	Yes			Yes		
	No Dollar Limit (NDL)	No			Yes		

NOTE:
[1]For Emerald Pledge™ Limited Warranties and Diamond Pledge™ NDL Roof Guarantees, products must be applied per GAF's specificatons by contractors certified with GAF at the appropriate level. Other requirements and restrictions may apply. Contact GAF at 1-877-423-7663 for more information.
[2] One time only
[3] Please see applicable guarantee/warranty, available at gaf.com, for complete coverage and restrictions.

SECTION 2
Substrate Preparation

GENERAL SUBSTRATE CONDITIONS

Preparation of the roof substrate is the responsibility of the installer, who must address and correct all of the conditions listed in this section.

- Examine substrates to receive new roofing. If any questions arise regarding the compatibility of GAF products with an existing substrate, prepare test patches to check adhesion.
- Do not proceed with the installation of the GAF coating system until compatibility and adhesion of GAF coating system has been verified by test patches and other preparatory work has been completed and unsatisfactory conditions have been corrected.
- Roof must have positive drainage. Substrate should not pond water for more than 48 hours after precipitation stops. GAF defines "ponding" as water that does not drain or dissipate from the roof surface within 48 hours after precipitation ends. Ponding can also result from other water sources, including improperly piped air conditioning condensate and steam condensate lines.
- Protect adjacent surfaces that will not be coated.
- Do not apply liquid-applied roofing products to substrates or surfaces unacceptable to GAF, or under inclement environmental conditions.
- Substrates must be clean, completely dry, and free of any debris before application of any liquid-applied products.
- GAF liquid-applied roofing products should not be used on heavy-traffic bearing substrates. If significant foot traffic is expected, a rooftop walkway system approved by GAF must be used.

Always contact GAF's Design Services at 877-423-7663 option 4, option 3 for questions regarding suitable substrates, materials for test patches, or if you require additional information.

PROPER PREPARATION FOR ROOF TYPES

To ensure proper coating application, the existing roof membrane must be thoroughly cleaned. All dust, chalking, film, bitumen exudate, greases or oils, and other loose debris should be removed prior to coating. Use caution when pressure washing to preserve the integrity of the existing roof membrane and to avoid damage to membrane seams (especially adhered seams). Allow roof to dry completely prior to priming or coating. Depending on type of existing substrate and coating to be applied, use of a primer may be required. Any required roof or flashing repairs should be completed and allowed to adequately cure where necessary. Refer to specific sections of this manual for more information on roof preparation.

Severely damaged or rusted seams and/or fasteners must be replaced.

WHAT IS BENEATH THE EXISTING ROOF SURFACE?

In membrane roof systems, there is typically a layer of insulation beneath the membrane. If the roof has ever experienced leaks, it is possible that there are areas of wet insulation in the existing roofing system. All wet roof insulation must be removed and replaced prior to coating. While certain areas of wet insulation may be noticeable simply by walking on them, a moisture survey is recommended to more accurately determine areas of wet insulation.

Metal roofs are typically installed over a solid roof deck or over purlins and insulation. Examining the underside of the roof deck can reveal areas of wet insulation, deteriorated deck or other damage that needs to be repaired prior to coating.

MOISTURE SURVEY

It is the sole responsibility of the roofing contractor to determine the suitability of any substrate to receive a GAF roof coating. Roof moisture surveys are a common tool used to assist with this determination.

In order to be eligible to receive a Liquid-Applied NDL Diamond Pledge™ Roof Guarantee, GAF requires a moisture survey of the existing roof substrate to determine if moisture is present.

- If the moisture survey reveals that 25% or more of the roof area contains moisture, then a complete tear-off is required.

A roof **moisture survey** may include one of the following ways to determine if moisture is present in the existing roof substrate: **IR scan, nuclear scan, core cuts* and portable devices to indicate moisture. GAF reserves the right to determine the type of survey required**.

*A minimum of three [3] core cuts for the first 100 squares and one [1] core cut per additional 100 squares are required to verify existing roof conditions are acceptable and/or to determine where moisture is present.

REPAIR

Inspect and make all necessary repairs to damaged substrates. Refer to the Damaged Substrate Treatment section below for substrate-specific information.

Damaged Substrate Treatment: Metal	
Areas of Concern	**Treatment**
Rust Areas	• *Severely damaged or rusted seams and/or fasteners must be replaced.* • *Roof panels that are corroded to the point that they have holes must be replaced.* • *Light rust areas must be treated to prevent further deterioration of metal panels. Surface should not have more than 20% rust.*
Fasteners	• *All fasteners must be retightened or replaced as necessary. All stripped fasteners must be replaced with new larger fasteners.* • *All deteriorated and missing fasteners must be replaced.* • *All fasteners must be fully encapsulated with flashing grade coating or GAF Repair Caps (refer toTechnical Data Sheets for specific application requirements).*
Dented / Damaged Panels	• *Dents must be mechanically removed to the maximum extent possible.* • *Cover damaged/broken ribs with a sheet metal cap and seal with flashing grade prior to fastening the cap with fasteners.* • *Severely damaged roof panels must be replaced.*
Excessive Gaps	• *Seal cracks, joints, penetrations, and curbs with appropriate materials as recommended.* • *Contact GAF Design Services for more information.*
Seams	• Repair all seams as needed. Refer to the **Seam Treatment Guide** for specific guidance.
Open Ridge Vents	• *Replace or install sheet metal caps over the open ridge vents if rust is present on the inside and/or roof is located in a harsh environment (e.g., salt water areas).* • *Do not seal weep holes on vents.*

Damaged Substrate Treatment: Non-Metal	
Substrate	**Treatment**
TPO	• *Any areas where TPO has torn, cracked, and/or buckled must be repaired using compatible materials.* • *Any wet insulation must be replaced.* • *Allow at least 48 hours drying time after the cleaning process before application of liquid-applied products.*
PVC	• *Any areas where PVC has torn, cracked, and/or buckled must be repaired using compatible materials.* • *Any wet insulation must be replaced.* • *Allow at least 48 hours drying time before application of liquid-applied products.*
Spray Polyurethane Foam	• *All areas where the urethane foam has degraded must be scarified and re-foamed to create a smooth, workable substrate.* • *Any areas where foam is wet/damaged must be removed and re-foamed.*
EPDM	• *Any areas where EPDM has torn, cracked, and/or buckled must be repaired using compatible materials.* • *Any wet insulation must be replaced.* • *Allow at least 48 hours drying time before application of liquid-applied products.*
Mineral & Granule Surfaced BUR or Modified Bitumen (SBS & APP) OR Smooth Surfaced BUR or Modified Bitumen (SBS & APP)	• *Any areas where asphaltic membranes have blistered, buckled, become wet and/or damaged must be removed and repaired using compatible materials.* • *New BUR or modified bitumen repair materials must be allowed to weather at least 30 days before applying liquid-applied products.* • *All areas where BUR or modified bitumen surfaces have significantly cracked (gaps 1/16" [1.6 mm] or greater in width and/or depth) must be repaired using flashing grade coating to create a smooth, workable substrate.* • *Allow flashing grade coating at least 8 hours drying time before application of liquid-applied products. Areas with thicker applications may require additional drying time.* • *Gravel-surfaced BUR or modified bitumen is not a suitable substrate to receive a liquid-applied coating.*
Corrugated Structural Transite Panels	• *All large or excessive gaps (greater than 1/4" [6 mm]) between roof panels must be filled or made flush with closed-cell foam strips or polyurethane foam to pre-fill voids.* • *All fasteners must be retightened or replaced as necessary. All stripped fasteners must be replaced with larger fasteners.* • *All deteriorated or missing fasteners must be replaced.* • *All fasteners must be fully encapsulated with flashing grade or GAF Repair Caps.* • *Repair all horizontal seams as necessary. Refer to the Seam Treatment Guide for specific guidance.* • *Many of these panels can contain asbestos. Refer to the Environmental Considerations in the Cleaning Procedures section for further information.*
Wood Plywood/Tongue & Groove	• *Any areas where substrate is rotten, wet and/or damaged must be removed and repaired using similar products.* • *All large or excessive gaps (greater than 1/4" [6mm]) existing between roof panels and/or penetrations must be filled with flashing grade coating to create to a smooth, workable surface on the substrate.* • *All fasteners must be retightened or replaced as necessary. All stripped fasteners must be replaced with larger fasteners.* • *All deteriorated and missing fasteners must be replaced. All fasteners must be fully encapsulated with flashing grade.*
Structural Concrete	• *All large or excessive gaps (greater than 1/4" [6 mm]) must be repaired using high-quality concrete grout. Grout must fully cure before applying liquid-applied products.* • *Correct areas of ponding water.*

Treatment	
General Surface Prep	• *Clean and prepare surfaces to receive liquid-applied roofing products. Remove all dirt, dust, loose and flaking particles, grease, oil, laitance, pollution fallout, and other contaminants that may interfere with proper adhesion.* • *Use a stiff bristle push broom and/or pressure washing for cleaning and surface preparation.* • *Contact GAF Technical Sales Support if there are living organisms on the roof substrate.*
Pressure Washing	• Substrate may be pressure-washed with water and/or approved cleaner. Refer to the ***Cleaner & Primer Guide*** for specific substrates and cleaning requirements. • *A minimum working pressure of 2,000 psi should be used to remove all dirt, dust, chalking and waste products (oil, oil-based roof cements, solvents, grease, animal fats, etc.).* • *Concrete, EPDM, and metal substrates should use a minimum working pressure of 3,000 psi.* • *Do not damage the roof surface or inject water into the substrate during washing.* • *Allow at least 48 hours for drying time before the application of liquid-applied products.*
Important! **Environmental Considerations**	• *Corrugated or structural transite panels may contain asbestos, which can be released during pressure-washing. Asbestos dust is an extreme health hazard and a known carcinogen. It is the Installer's responsibility to check with state and local agencies regarding proper disposal of asbestos material, as well as the proper protection for workers exposed to such material.* • *Roof wash-off catchment systems should be in place when required. Be sure to follow state and local requirements for roof-wash off catchments during the cleaning process.*

Substrate Preparation: Metal	
Areas of Concern	**Preparation**
Crickets	• *Sheet metal crickets must be installed according to manufacturer's specifications.* • *New crickets must be sealed with FlexSeal™ Sealant under the flanges prior to mechanically fastening to the curb unit and metal roof panel.* • *Stitch-screw cricket flanges to the curb unit and metal roof panel while the FlexSeal™ Sealant is still wet using fasteners.*
Ponding Water Areas	• *Make every effort to eliminate all ponding water areas prior to coating application.* • *Treat ponding water areas which cannot be eliminated with Flex-Seal™ Sealant prior to application of other coatings.*
Residual Asphalt	• *Remove any existing asphaltic roof coating.* • *Any residual asphalt must be coated with the recommended coating/primer for the specific system (see Cleaner & Primer Guide).*
Pre-Finished Metal Panels	• *If roof panel surfaces are known or suspected to contain Kynar-500, other fluoropolymers, or silicone, test patches must be prepared with and without the use of a recommended primer (see Cleaner & Primer Guide) to determine whether priming is necessary. If priming is necessary apply primer on pre-finished metal panels per specifications.*
Pitch Pans	• *Pitch pans must be capped with sheet metal to allow for proper sealing with GAF liquid-applied products. Contact GAF's Technical Sales Support Services for more information.*
Neoprene Pipe Boots	• *Install neoprene pipe boots prior to performing flashing work for certain types of pipe penetrations. Neoprene pipe boots first must be sealed to the roof using a bead of FlexSeal™ Sealant prior to mechanically fastening.*
Condensate Lines	• *Condensate lines should be installed from the HVAC units to gutters as part of the overall drainage system. The type of piping used for condensate lines may vary depending on local building codes.* • *Condensate lines must be securely fastened to panel ribs.*
Gutter Straps	• *All gutter straps that are fastened above roof panels must be fully encapsulated with the recommended coating, including the fasteners.*
Gutters	• *Trowel or brush apply FlexSeal™ Sealant to the interior or exterior gutter incorporating 12" (305 mm) of the recommended fabric at all gutter seams.*
Cinch Straps at Panel End Laps	• *Re-tighten cinch straps as necessary.* • *Surround each strap and fastener head with a bead of FlexSeal™ Sealant.* • *Fully inject FlexSeal™ Sealant into the cinch strap water channel, then seal the entire lap, strap, and fastener heads with a minimum 12" (305 mm) width of FlexSeal™ Sealant. Feather the FlexSeal™ Sealant out. Fabric is not required.*
Ridge Caps	• *All ridge caps must be flashed with the recommended coating and fabric.* • *All voids and open areas in the ridge cap must be filled with polyurethane foam prior to application of the coating and fabric.* • *For metal "Z" closures which are located within 2" (51 mm) of the ridge cap edge, remove all exposed sealant and apply a liberal bead of the recommended seam coating to all sides of the "Z" closure where they intersect with both the roof panel and ridge cap.*

Substrate Preparation: Metal (Cont'd.)	
Areas of Concern	**Preparation**
Rakes	• *All fixed rake details for the roof must be sealed with a minimum 12" (305 mm) width of the recommended coating and fabric. Embed the fabric between two layers of the coating, extending 6" (152 mm) up the vertical and 6" (152 mm) onto the base.* • *If fixed rake metal is fastened to the top of roof panel ribs and extends back onto the roof, trim off any excess metal and follow horizontal seam flashing procedures.* • *All voids and open areas must be filled with polyurethane foam prior to application of the coating and fabric.*
Parapet Walls	• *All parapet wall details within the roof system must be sealed with a minimum 12" (305 mm) width of the recommended coating and fabric. Embed the fabric between two layers of the coating, extending 6" (152 mm) up the vertical and 6" (305 mm) onto the base.* • *If parapet wall flashing metal is fastened to the top of roof panel ribs and extends back onto the roof, trim off any excess metal and follow horizontal seam flashing procedures.* • *All voids and open areas must be filled with polyurethane foam prior to application of the recommended coating and fabric.* • *Fabric must be cut around all fasteners so it lies flat. GAF Repair Caps can alternatively be used.*
Standing Seam Panels	• *Contact GAF's Design Services at 1-877-423-7663.*
Curb Flashings	• *All curb flashings, including cricket details, must be sealed with a minimum 12" (305 mm) width of the recommended coating and fabric. Embed the fabric between two layers of the coating, extending 6" (152 mm) up the vertical and 6" (305 mm) onto the base.* • *Encapsulate all fasteners using the recommended coating. Do not bridge fasteners.* • *The fabric must be cut around all fasteners so it lies flat.*
Penetrations	• *The recommended coating and fabric must be applied around the base of all penetrations. Embed the minimum 12" (305 mm) width fabric between two layers of the coating, extending 6" (152 mm) up the vertical and 6" (305 mm) onto the base.* • *Cut the fabric to accommodate the shape of the penetration avoiding wrinkles.*
Penetrations	• *The recommended coating and fabric must be applied around the base of all penetrations. Embed the minimum 12" (305 mm) width fabric between two layers of the coating, extending 6" (152 mm) up the vertical and 6" (305 mm) onto the base.* • *Cut the fabric to accommodate the shape of the penetration avoiding wrinkles.*
Skylights	• *Curb skylights must be treated in the same fashion as curb flashings.* • *Fiberglass r-panel skylights must be sealed on all 4 sides with a minimum 6" (152 mm) of the recommended coating and fabric.* • *For polycarbonate corrugated skylights, please contact GAF's Design Services at 1-877-423-7663.* • *After flashing work has been completed and the coating has cured, treat deteriorated fiberglass skylight panels with GAF Sky-Lite.*
Walkways	• *To create walkway areas for maintenance traffic, after field area coating has been installed, tape off area for walkway.* • *Install an additional application of top coat at 1 gallon per square and immediately broadcast up to 25 lbs. per square of #11 ceramic coated roofing granules into the wet coating. Remove tape and allow coating to dry.* • *Remove all loose granules.*

Substrate Preparation: Metal (Cont'd.)

	Areas of Concern	Preparation
VERTICAL SEAMS	**Ribbed Seam**	• *All ribbed panel vertical seams must be sealed with the recommended seam coating. Feather the coating until seams are no longer visible while brushing in the direction parallel to the seam.*
	Standing Seam	• *All standing vertical seams must be sealed with a 1/2" (12 mm) bead of the recommended seam coating. Feather the coating until seams are no longer visible while brushing in the direction parallel to the seam.*
	Standing "T" Seam	• *Both vertical seams of the standing "T" must be flashed with a 1/2" (12 mm) bead of the recommended seam coating and brushed into the seams.*
	Inverted "J" Seam	• *In snowy climates and/or when roof leaks are suspected, re-crimping the short leg of the seam all the way under the horizontal portion of the inverted "J" seam is required. Brush or trowel-apply the recommended seam coating over the newly created single lock vertical seam. Portable seamers may be used to perform the re-crimping.*
	Corrugated Seam	• *All corrugated panel vertical seams must be sealed with the recommended seam coating system. Feather the coating until seams are no longer visible while brushing in the direction parallel to the seam.*
	Batten Seam	• *Both vertical seams of the batten must be flashed with a 1/2" (12 mm) bead of the recommended seam coating. Feather the coating until seams are no longer visible while brushing in the direction parallel to the seam.*
HORIZONTAL SEAMS	**Horizontal Seam**	• *All seams must be reinforced with either fabric between two layers of the recommended coating or flashing grade product.* • *The coating must be feathered at least 1" (25 mm) beyond each side of the 6" (152 mm) width to allow water to flow over the seam.* • *Fabric must be cut around all fasteners so it lies flat.* • *For ribbed roof panels, the fabric must be applied over panel ribs in continuous lengths. A minimum 2" (51 mm) overlap is required for all splices in fabric.* • *Horizontal seams must be secured with fasteners on the high side of every other corrugation, spaced no more than 12" (305 mm) on center.* • *The horizontal seam must be made flush by installing two fasteners per flute.*

Substrate Preparation: Spray Polyurethane Foam (SPF)	
Areas of Concern	**Treatment**
Parapet Walls/Curb/ Penetration Flashings	• *SPF is self-flashing and should be adhered to all adjacent surfaces.* • *Repair any minor separations from shrinkage with the specified flashing grade and fabric if necessary.*
Skylights	• *Curb skylights must be treated in the same fashion as curb flashings.* • *After flashing work has been completed and the coating has cured, treat deteriorated fiberglass skylight panels with GAF Sky-Lite.*
Gutters	• *Trowel or brush apply FlexSeal™ Sealant to the interior or exterior gutter incorporating 12" (305 mm) of the recommended fabric at all gutter seams.*
Pitch Pans	• *Pitch pans must be capped with sheet metal to allow for proper sealing with GAF products.* • *Contact GAF Design Services for more information.*
Condensate Lines	• *Condensate lines should be installed from HVAC units to gutters as part of the overall drainage system. The type of piping used for condensate lines may vary depending on local building codes.* • *Condensate lines must be securely fastened to the roof.*
Walkways	• *To create walkway areas for maintenance traffic, after field area coating has been installed, tape off area for walkway.* • *Install an additional application of top coat at 1 gallon per square and immediately broadcast up to 25 lbs. per square of #11 ceramic coated roofing granules into the wet coating. Remove tape and allow coating to dry.* • *Remove all loose granules.*

Substrate Preparation: TPO	
Areas of Concern	**Treatment**
Parapet Walls/ Curb Flashings	• *Repair all open seams and any loose or failed terminations with like materials welded in place prior to application of the recommended coating and fabric.* • *All parapet wall details within the roof system must be sealed with a minimum 12" (305 mm) width of the recommended coating and fabric. Embed the fabric between two layers of the coating, extending 6" (152 mm) up the vertical and 6" (152 mm) onto the base.* • *All curb flashings, including cricket details, must be sealed with a minimum 12" (305 mm) width of the recommended coating and fabric. Embed the fabric between two layers of the coating, extending 6" (152 mm) up the vertical and 6" (152 mm) onto the base.* • *Encapsulate all fasteners using the recommended coating. Do not bridge fasteners.* • *Fabric must be cut around all fasteners so it lies flat.*
Penetrations	• *The recommended coating and fabric must be applied around the base of all penetrations. Embed the minimum 12" (305 mm) width fabric between two layers of the coating, extending 6" (152 mm) up the vertical and 6" (305 mm) onto the base.* • *Cut the fabric to accommodate the shape of the penetration, avoiding wrinkles.*
Skylights	• *Curb skylights must be treated in the same fashion as curb flashings.* • *After flashing work has been completed and the coating has cured, treat deteriorated fiberglass skylight panels with GAF Sky-Lite.*
Gutters	• *Trowel or brush apply FlexSeal™ Sealant to the interior or exterior gutter incorporating 12" (305 mm) of the recommended fabric at all gutter seams.*
Pitch Pans	• *Pitch pans must be capped with sheet metal to allow for proper sealing with GAF products.* • *Contact GAF Technical Sales Support Services for more information.*
Condensate Lines	• *Condensate lines should be installed from HVAC units to gutters as part of the overall drainage system. The type of piping used for condensate lines may vary depending on local building codes.* • *Condensate lines must be securely fastened to the roof.*
Walkways	• *To create walkway areas for maintenance traffic, after field area coating has been installed, tape off area for walkway.* • *Install an additional application of top coat at 1 gallon per square and immediately broadcast up to 25 lbs. per square of #11 ceramic coated roofing granules into the wet coating. Remove tape and allow coating to dry.* • *Remove all loose granules.*

Substrate Preparation: PVC	
Areas of Concern	**Treatment**
Parapet Walls/ Curb Flashings	• *Repair all open seams and any loose or failed terminations with like materials prior to application of the recommended coating and fabric.* • *All parapet wall details within the roof system must be sealed with a minimum 12" (305 mm) width of the recommended coating and fabric. Embed the fabric between two layers of the coating, extending 6" (152 mm) up the vertical and 6" (152 mm) onto the base.* • *All curb flashings, including cricket details, must be sealed with a minimum 12" (305 mm) width of the recommended coating and fabric. Embed the fabric between two layers of the coating, extending 6" (152 mm) up the vertical and 6" (152 mm) onto the base.* • *Encapsulate all fasteners using the recommended coating. Do not bridge fasteners.* • *Fabric must be cut around all fasteners so it lies flat.*
Penetrations	• *The recommended coating and fabric must be applied around the base of all penetrations. Embed the minimum 12" (305 mm) width fabric between two layers of the coating, extending 6" (152 mm) up the vertical and 6" (305 mm) onto the base.* • *Cut the fabric to accommodate the shape of the penetration, avoiding wrinkles.*
Skylights	• *Curb skylights must be treated in the same fashion as curb flashings.* • *After flashing work has been completed and the coating has cured, treat deteriorated fiberglass skylight panels with GAF Sky-Lite.*
Gutters	• *Trowel or brush apply FlexSeal™ Sealant to the interior or exterior gutter incorporating 12" (305 mm) of the recommended fabric at all gutter seams.*
Pitch Pans	• *Pitch pans must be capped with sheet metal to allow for proper sealing with GAF products.* • *Contact GAF Technical Sales Support Services for more information.*
Condensate Lines	• *Condensate lines should be installed from HVAC units to gutters as part of the overall drainage system. The type of piping used for condensate lines may vary depending on local building codes.* • *Condensate lines must be securely fastened to the roof.*
Walkways	• *To create walkway areas for maintenance traffic, after field area coating has been installed, tape off area for walkway.* • *Install an additional application of top coat at 1 gallon per square and immediately broadcast up to 25 lbs. per square of #11 ceramic coated roofing granules into the wet coating. Remove tape and allow coating to dry.* • *Remove all loose granules.*

Substrate Preparation: EPDM	
Areas of Concern	**Treatment**
Parapet Walls/ Curb Flashings	• *Repair all open seams and any loose or failed terminations with like materials welded in place prior to application of the recommended coating and fabric.* • *All parapet wall details within the roof system must be sealed with a minimum 12" (305 mm) width of the recommended coating and fabric. Embed the fabric between two layers of the coating, extending 6" (152 mm) up the vertical and 6" (152 mm) onto the base.* • *All curb flashings, including cricket details, must be sealed with a minimum 12" (305 mm) width of the recommended coating and fabric. Embed the fabric between two layers of the coating, extending 6" (152 mm) up the vertical and 6" (152 mm) onto the base.* • *Encapsulate all fasteners using the recommended coating. Do not bridge fasteners.* • *Fabric must be cut around all fasteners so it lies flat.*
Penetrations	• *The recommended coating and fabric must be applied around the base of all penetrations. Embed the minimum 12" (305 mm) width fabric between two layers of the coating, extending 6" (152 mm) up the vertical and 6" (305 mm) onto the base.* • *Cut the fabric to accommodate the shape of the penetration, avoiding wrinkles.*
Skylights	• *Curb skylights must be treated in the same fashion as curb flashings.* • *After flashing work has been completed and the coating has cured, treat deteriorated fiberglass skylight panels with GAF Sky-Lite.*
Gutters	• *Trowel or brush apply FlexSeal™ Sealant to the interior or exterior gutter incorporating 12" (305 mm) of the recommended fabric at all gutter seams.*
Pitch Pans	• *Pitch pans must be capped with sheet metal to allow for proper sealing with GAF products.* • *Contact GAF Technical Sales Support Services for more information.*
Condensate Lines	• *Condensate lines should be installed from HVAC units to gutters as part of the overall drainage system. The type of piping used for condensate lines may vary depending on local building codes.* • *Condensate lines must be securely fastened to the roof.*
Walkways	• *To create walkway areas for maintenance traffic, after field area coating has been installed, tape off area for walkway.* • *Install an additional application of top coat at 1 gallon per square and immediately broadcast up to 25 lbs. per square of #11 ceramic coated roofing granules into the wet coating. Remove tape and allow coating to dry.* • *Remove all loose granules.*

Substrate Preparation: Smooth & Granulated Surfaced Asphaltic	
Areas of Concern	**Treatment**
Parapet Walls/ Curb Flashings	• *Repair all open seams and any loose or failed terminations with like materials welded in place prior to application of the recommended coating and fabric.* • *All parapet wall details within the roof system must be sealed with a minimum 12" (305 mm) width of the recommended coating and fabric. Embed the fabric between two layers of the coating, extending 6" (152 mm) up the vertical and 6" (152 mm) onto the base.* • *All curb flashings, including cricket details, must be sealed with a minimum 12" (305 mm) width of the recommended coating and fabric. Embed the fabric between two layers of the coating, extending 6" (152 mm) up the vertical and 6" (152 mm) onto the base.* • *Encapsulate all fasteners using the recommended coating. Do not bridge fasteners.* • *Fabric must be cut around all fasteners so it lies flat.*
Penetrations	• *The recommended coating and fabric must be applied around the base of all penetrations. Embed the minimum 12" (305 mm) width fabric between two layers of the coating, extending 6" (152 mm) up the vertical and 6" (305 mm) onto the base.* • *Cut the fabric to accommodate the shape of the penetration, avoiding wrinkles.*
Skylights	• *Curb skylights must be treated in the same fashion as curb flashings.* • *After flashing work has been completed and the coating has cured, treat deteriorated fiberglass skylight panels with GAF Sky-Lite.*
Gutters	• *Trowel or brush apply FlexSeal™ Sealant to the interior or exterior gutter incorporating 12" (305 mm) of the recommended fabric at all gutter seams.*
Pitch Pans	• *Pitch pans must be capped with sheet metal to allow for proper sealing with GAF products.* • *Contact GAF Technical Sales Support Services for more information.*
Condensate Lines	• *Condensate lines should be installed from HVAC units to gutters as part of the overall drainage system. The type of piping used for condensate lines may vary depending on local building codes.* • *Condensate lines must be securely fastened to the roof.*
Walkways	• *To create walkway areas for maintenance traffic, after field area coating has been installed, tape off area for walkway.* • *Install an additional application of top coat at 1 gallon per square and immediately broadcast up to 25 lbs. per square of #11 ceramic coated roofing granules into the wet coating. Remove tape and allow coating to dry.* • *Remove all loose granules.*

Substrate Preparation: Structural Concrete

Areas of Concern	Treatment
Parapet Walls	• *Repair all cracked, spalled and open concrete holes with an in-kind cementitious patch. Repair any loose or failed seams in concrete with similar materials as originally used. This is commonly a polyurethane sealant with a closed cell polyethylene backer rod.* • *All parapet wall details within the roof system must be sealed with a minimum 12" (305 mm) width of the recommended coating and fabric. Embed the fabric between two layers of the coating, extending 6" (152 mm) up the vertical and 6" (152 mm) onto the base.* • *Fabric must be cut around all fasteners so it lies flat.*
Curb Flashings	• *All curb flashings, including cricket details, must be flashed with at least a 12" (305 mm) width of the recommended coating and fabric.* • *Encapsulate all fasteners using the recommended coating. Do not bridge fasteners.* • *Fabric must be cut around all fasteners so it lies flat.*
Penetrations	• *The recommended coating and fabric must be applied around the base of all penetrations. Embed the minimum 12" (305 mm) width fabric between two layers of the coating, extending 6" (152 mm) up the vertical and 6" (305 mm) onto the base.* • *Cut the fabric to accommodate the shape of the penetration, avoiding wrinkles.*
Skylights	• *Curb skylights must be treated in the same fashion as curb flashings.* • *After flashing work has been completed and the coating has cured, treat deteriorated fiberglass skylight panels with GAF Sky-Lite.*
Gutters	• *Trowel or brush apply FlexSeal™ Sealant to the interior or exterior gutter incorporating 12" (305 mm) of the recommended fabric at all gutter seams.*
Pitch Pans	• *Pitch pans must be capped with sheet metal to allow for proper sealing with GAF products.* • *Contact GAF Technical Sales Support Services for more information.*
Condensate Lines	• *Condensate lines should be installed from HVAC units to gutters as part of the overall drainage system. The type of piping used for condensate lines may vary depending on local building codes.* • *Condensate lines must be securely fastened to the roof.*
Walkways	• *To create walkway areas for maintenance traffic, after field area coating has been installed, tape off area for walkway.* • *Install an additional application of top coat at 1 gallon per square- and immediately broadcast up to 25 lbs. per square of #11 ceramic coated roofing granules into the wet coating. Remove tape and allow coating to dry.* • *Remove all loose granules.*

ADHESION TESTING

Adhesion testing is generally performed to verify the suitability of a substrate to receive a liquid-applied coating system. **It is the responsibility of the roofing contractor** to determine the suitability of the substrate prior to the application of a liquid-applied coating system, as well as whether priming is required.

When adhesion tests are conducted:

- GAF requires roofing contractors to conduct an adhesion test before registering a GAF guarantee.
- Test patches shall be labeled and photographed to document adhesion results.
- The roofing contractor shall retain the adhesion test documentation and GAF reserves the right to request the documentation at any time.
- Installers may consult with GAF's Design Services at 1-877-423-7663, option 4, option 3 concerning adhesion test results.

Test Method: Field Peel Adhesion	
Overview	ASTM D903 "Peel Adhesion" is found in all roof coating standards and is especially well–suited to field testing with elastomeric materials. Primers and enamels may also be evaluated by a similar test, ASTM D3359 "Tape Adhesion." It may also be important to run the test wet to determine "wet adhesion."
Preparation	• *Make a mock-up of the intended coating system on the existing roof surface.* • *Perform any necessary mechanical surface preparation.* • *Simulate cleaners and power washing. A worn Scotch-Brite® cleaning pad makes a good power washing simulation.* • *Prime as specified.* • *Apply a layer of the specified coating to the substrate.* • *Prepare no fewer than three (3) test patches for the first 100 squares and one (1) additional patch for each additional 100 squares at different locations on the roof for all questionable roof substrates to verify adhesion of the liquid-applied coating system.*
Test Method	• *Place about 6" (152 mm) of the precut 1" (25 mm) x 12" (305 mm) fabric strip into the coating.* • *Allow the remaining 6" (152 mm) of the fabric to be available to pull on for test sample.* • *Apply another layer of coating to encapsulate the wetted section of fabric.* • *Allow to dry. This can be anywhere from 8 hours to 2 weeks. In warm weather, 1 day may be sufficient. In cold weather, 5 days is often required. The standard practice is 1 week.* • *Some coatings like a polyvinylidene difluoride (PVDF) or silicone may require longer full curing times.* • *Soak prior to testing (best practice). One hour is usually sufficient, use a wet rag and cover with a bucket lid or plastic.*
Post-Installation Method (Only to be done if standard test was omitted)	• *Pre-cut 1" (25 mm) wide strips of butyl tape. Use butyl tape to run the pull test. The butyl tape is typically easier to use with a gauge as it will bond to itself making a perfect loop. Repair the area with similar coating after test is complete. A "wet adhesion" version can be accomplished by soaking the roof area first as indicated above, and then towel dry.*

Evaluation
• *Use a force gauge such as a digital fish scale or trigger pressure gauge.* • *A loop, staple or clamp may be used to hold the fabric in the gauge.* • *Pull slowly with the force gauge. The average value should be above 2 PLI (Pounds per linear inch) of fabric width.*

SECTION 3
Quick Specs

ACRYLIC SPEC DIRECTORY

Spec Number	Substrate Specification	Page #
LAR-1	Metal	34
LAR-2	Aged TPO	35
LAR-3	Aged PVC	36
LAR-5	EPDM	37
LAR-6	Smooth Asphaltic	38
LAR-7	Granulated Asphaltic	39
LAR-8	Structural Concrete	40
LAR-9	Corrugated Structural Transite Panels	41
LAR-10	Spray Polyurethane Foam (SPF)	42

Quick Specs are abbreviated specifications and are not meant to replace detailed specifications. Complete 3-part CSI System Specifications are available at www.gaf.com.

Acrylic Quick Spec

METAL (LAR-1)

NOTE: The following "Quick Spec" is an abbreviated specification and is not meant to replace the detailed specification. Complete 3-part CSI System Specifications are available at www.gaf.com

METHOD REQUIREMENTS

Required:

- ❍ Roof must be clean, dry and tight
- ❍ Apply at 50°F (10°C) and rising with no rain, dew, fog, or freezing temperatures in forecast for 8 hours
- ❍ Adhesion test required
- ❍ Power washing required
- ❍ Rust should be removed with a wire brush prior to coating, and structural repairs should be made with like materials as needed.

Recommendations:

- Refer to Technical Data Sheet for product specific application and surface temperature restrictions.

Installation Overview:

1. Before coating is applied, an adhesion test is required to ensure an adhesion minimum of 2.0 pounds per linear inch (PLI). Test patches should be applied with rates listed below.
2. Tighten/replace existing fasteners. Encapsulate with appropriate flashing material.
3. Power-wash substrate to remove contaminants that could negatively affect adhesion. Allow roof to completely dry.
4. Install crickets to divert water and complete other necessary sheet metal repairs.
5. Prime rusty areas per chart below.
6. Horizontal seams must be 3-coursed. Overlap and trapezoidal vertical seams must be treated with flashing grade only. Other vertical seams may forgo treatment **IF** the seal/tape is intact on the seam or if they are double locked. (Refer to Seam Treatment Guide for requirements)
7. Treat all roof penetrations, drains, curbs, and scuppers. (Refer to Substrate Preparation section for requirements)
8. Apply coating per the chart below:

CLEAN / PRIME

	Product	Rate (Gal/Sq)
Cleaner	Cleaning Concentrate *(diluted)*	0.5 - 0.7
Primer (rusty areas)	Metal Roof Primer	0.3 - 0.5

SEAMS & DETAILS

Treatment Type	Product	Total (Gal/Sq)	Total (linear ft/gal)+	DFT* (mils)
3-Coursed Rates	Premium Brush-Grade Acrylic Flashing & Fabric	4.0	30	43
Flashing Grade Only Rates	Premium Brush-Grade Acrylic Flashing	2.0	100	19

Note: For other product options, please refer to our Seam Treatment Guide.
+Flashing rates are based on a 6" (152 mm) width.

METAL

Coverage Term	Coating				Total		Warranties/Guarantees Available	
	Product (Choose one)	1st Coat (Gal/Sq)[1]	2nd Coat (Gal/Sq)	3rd Coat (Gal/Sq)	Gal/Sq	DFT* (mils)	Emerald Pledge™	Diamond Pledge™
10 Year	Premium Acrylic HydroStop® Top Coat	0.75	0.75		1.50	13	Yes	Yes
	High Tensile Acrylic Top Coat	1.00	1.50		2.50	21		
	Acrylic Top Coat	1.00	1.50		2.50	21		
	WOB Acrylic TopCoat®	1.00	1.50		2.50	23		
15 Year	Premium Acrylic HydroStop® Top Coat	1.00	1.00		2.00	17	Yes	Yes
	High Tensile Acrylic Top Coat	1.00	1.50	1.00	3.50	29		
	Acrylic Top Coat	1.00	1.50	1.00	3.50	30		
	WOB Acrylic TopCoat®	1.00	1.50	1.00	3.50	32		
20 Year	Premium Acrylic HydroStop® Top Coat	1.50	1.50		3.00	25	Yes	Yes
	High Tensile Acrylic Top Coat	1.50	1.50	1.50	4.50	38		
	Acrylic Top Coat	1.50	1.50	1.50	4.50	38		
	WOB Acrylic TopCoat®	1.50	1.50	1.50	4.50	42		

** Dry Film Thickness (DFT) is rounded to nearest mil, and is theoretical. Actual DFT will vary dependent on substrate profile, application technique and waste factor.*
[1]A Base Coat should be used as first coat.
Note: DFT for 3-coursed rates includes 6 mils for the fabric.

Acrylic Quick Spec

AGED TPO (LAR-2)

NOTE: The following "Quick Spec" is an abbreviated specification and is not meant to replace the detailed specification. Complete 3-part CSI System Specifications are available at www.gaf.com

METHOD REQUIREMENTS

Required:

- ❍ Moisture survey required
- ❍ Remove and replace any wet areas
- ❍ Repair membrane with like materials[2]
- ❍ Roof must be clean, dry and tight
- ❍ Apply at 50°F (10°C) and rising with no rain, dew, fog, or freezing temperatures in forecast for 8 hours
- ❍ Adhesion test required[2]
- ❍ Power washing required

Recommendations:

- Refer to Technical Data Sheet for product specific application and surface temperature restrictions.

Installation Overview:

1. Before coating is applied, an adhesion test is required to ensure an adhesion minimum of 2.0 pounds per linear inch (PLI). Test patches should be applied with rates listed below[2].
2. Power-wash substrate to remove contaminants that could negatively affect adhesion. Allow roof to completely dry.
3. Treat all roof penetrations, drains, curbs, and scuppers. (Refer to Substrate Preparation section for requirements)
4. All loose seams must be 3-coursed. All other seams must be treated with flashing grade only, no fabric required. (Refer to Seam Treatment Guide for requirements)
5. Apply coating per the chart below:

CLEAN

	Product	Rate (Gal/Sq)
Cleaner	Cleaning Concentrate *(diluted)*	0.5 - 0.7

SEAMS & DETAILS

Treatment Type	Product	Total (Gal/Sq)	Total (linear ft/gal)+	DFT* (mils)
3-Coursed Rates	Premium Brush-Grade Acrylic Flashing and Fabric	4.0	30	43
Flashing Grade Only Rates	Premium Brush-Grade Acrylic Flashing	2.0	100	19

Note: For other product options, please refer to our Seam Treatment Guide.
+Flashing rates are based on a 6" (152 mm) width.

AGED TPO

Coverage Term	Coating				Total		Warranties/Guarantees Available	
	Product (Choose one)	1st Coat (Gal/Sq)[1]	2nd Coat (Gal/Sq)	3rd Coat (Gal/Sq)	Gal/Sq	DFT* (mils)	Emerald Pledge™	Diamond Pledge™
10 Year	Premium Acrylic HydroStop® Top Coat	1.50	1.50		3.00	25	Yes	No
	High Tensile Acrylic Top Coat	1.50	1.50		3.00	25		
	Acrylic Top Coat	1.50	1.50		3.00	26		
	WOB Acrylic TopCoat®	1.50	1.50		3.00	28		
15 Year	Premium Acrylic HydroStop® Top Coat	1.50	1.50	1.00	4.00	33	Yes	No
	High Tensile Acrylic Top Coat	1.50	1.50	1.00	4.00	33		
	Acrylic Top Coat	1.50	1.50	1.00	4.00	33		
	WOB Acrylic TopCoat®	1.50	1.50	1.00	4.00	37		

** Dry Film Thickness (DFT) is rounded to nearest mil, and is theoretical. Actual DFT will vary dependent on substrate profile, application technique and waste factor.*
[1]A Base Coat should be used as first coat.
Note: DFT for 3-coursed rates includes 6 mils for the fabric.
[2]For new TPO or when 2 PLI is not met, contact GAF Design Services.

Acrylic Quick Spec

AGED PVC (LAR-3)

NOTE: The following "Quick Spec" is an abbreviated specification and is not meant to replace the detailed specification. Complete 3-part CSI System Specifications are available at www.gaf.com.

METHOD REQUIREMENTS

Required:

- ❍ Moisture survey required
- ❍ Remove and replace any wet areas
- ❍ Repair membrane with like materials
- ❍ Roof must be clean, dry and tight
- ❍ Apply at 50°F (10°C) and rising with no rain, dew, fog, or freezing temperatures in forecast for 8 hours
- ❍ Adhesion test required
- ❍ Power washing required

Recommendations:

- Refer to Technical Data Sheet for product specific application and surface temperature restrictions.

Installation Overview:

1. Before coating is applied, an adhesion test is required to ensure an adhesion minimum of 2.0 pounds per linear inch (PLI). Test patches should be applied with rates listed below.
2. Power-wash substrate to remove contaminants that could negatively affect adhesion. Allow roof to completely dry.
3. Prime per chart below.
4. Treat all roof penetrations, drains, curbs, and scuppers. (Refer to Substrate Preparation section for requirements)
5. All loose seams must be 3-coursed. All other seams must be treated with flashing grade only, no fabric required. (Refer to Seam Treatment Guide for requirements)
6. Apply coating per the chart below:

CLEAN / PRIME

	Product	Rate (Gal/Sq)
Cleaner	Cleaning Concentrate *(diluted)*	0.5 - 0.7
Primer	Multi-Purpose Primer	0.33

SEAMS & DETAILS

Treatment Type	Product	Total (Gal/Sq)	Total (linear ft/gal)+	DFT* (mils)
3-Coursed Rates	Premium Brush-Grade Acrylic Flashing and Fabric	4.0	30	43
Flashing Grade Only Rates	Premium Brush-Grade Acrylic Flashing	2.0	100	19

Note: For other product options, please refer to our Seam Treatment Guide.
+Flashing rates are based on a 6" (152 mm) width.

AGED PVC

Coverage Term	Coating				Total		Warranties/Guarantees Available	
	Product (Choose one)	1st Coat (Gal/Sq)[1]	2nd Coat (Gal/Sq)	3rd Coat (Gal/Sq)	Gal/Sq	DFT* (mils)	Emerald Pledge™	Diamond Pledge™
10 Year	Premium Acrylic HydroStop® Top Coat	1.50	1.50		3.00	25	Yes	No
	High Tensile Acrylic Top Coat	1.50	1.50		3.00	25		
	Acrylic Top Coat	1.50	1.50		3.00	26		
	WOB Acrylic TopCoat®	1.50	1.50		3.00	28		
15 Year	Premium Acrylic HydroStop® Top Coat	1.50	1.50	1.00	4.00	33	Yes	No
	High Tensile Acrylic Top Coat	1.50	1.50	1.00	4.00	33		
	Acrylic Top Coat	1.50	1.50	1.00	4.00	34		
	WOB Acrylic TopCoat®	1.50	1.50	1.00	4.00	37		

** Dry Film Thickness (DFT) is rounded to nearest mil, and is theoretical. Actual DFT will vary dependent on substrate profile, application technique and waste.*
[1]A Base Coat should be used as first coat.
Note: DFT for 3-coursed rates includes 6 mils for the fabric.

Acrylic Quick Spec

EPDM (LAR-5)

NOTE: The following "Quick Spec" is an abbreviated specification and is not meant to replace the detailed specification. Complete 3-part CSI System Specifications are available at www.gaf.com.

METHOD REQUIREMENTS

Required:

- ❍ Moisture survey required
- ❍ Remove and replace any wet areas
- ❍ Repair membrane with like materials
- ❍ Roof must be clean, dry and tight
- ❍ Apply at 50°F (10°C) and rising with no rain, dew, fog, or freezing temperatures in forecast for 8 hours
- ❍ Adhesion test required
- ❍ Power washing required

Recommendations:

- Refer to Technical Data Sheet for product specific application and surface temperature restrictions.

Instructions:

1. Before coating is applied, an adhesion test is required to ensure an adhesion minimum of 2.0 pounds per linear inch (PLI). Test patches should be applied with rates listed below.
2. Power-wash substrate to remove contaminants that could negatively affect adhesion. Allow roof to completely dry.
3. Prime per chart below.
4. Treat all roof penetrations, drains, curbs, and scuppers. (Refer to Substrate Preparation section for requirements)
5. All loose seams must be 3-coursed. All other seams must be treated with flashing grade only, no fabric required. (Refer to Seam Treatment Guide for requirements)
6. Apply coating per the chart below:

CLEAN / PRIME

	Product	Rate (Gal/Sq)
Cleaner[3]	Cleaning Concentrate *(diluted)*	0.5 - 0.7
Primer	EPDM Activator	0.20

[3]Cleaner is only required for heavy dirt build up.

SEAMS & DETAILS

Treatment Type	Product	Total (Gal/Sq)	Total (linear ft/gal)[+]	DFT* (mils)
3-Coursed Rates	Premium Brush-Grade Acrylic Flashing and Fabric	4.0	30	43
Flashing Grade Only Rates	Premium Brush-Grade Acrylic Flashing	2.0	100	19

Note: For other product options, please refer to our Seam Treatment Guide.
[+]Flashing rates are based on a 6" (152 mm) width.

EPDM

Coverage Term	Coating				Total		Warranties/Guarantees Available	
	Product (Choose one)	1st Coat (Gal/Sq)[1]	2nd Coat (Gal/Sq)	3rd Coat (Gal/Sq)	Gal/Sq	DFT* (mils)	Emerald Pledge™	Diamond Pledge™
10 Year	Premium Acrylic HydroStop® Top Coat	1.50	1.50		3.00	25	Yes	No
	High Tensile Acrylic Top Coat	1.50	1.50		3.00	25		
	Acrylic Top Coat	1.50	1.50		3.00	26		
	WOB Acrylic Top Coat	1.50	1.50		3.00	28		
15 Year	Premium Acrylic HydroStop® Top Coat	1.50	1.50	1.00	4.00	33	Yes	No
	High Tensile Acrylic Top Coat	1.50	1.50	1.00	4.00	33		
	Acrylic Top Coat	1.50	1.50	1.00	4.00	34		
	WOB Acrylic TopCoat®	1.50	1.50	1.00	4.00	37		

** Dry Film Thickness (DFT) is rounded to nearest mil, and is theoretical. Actual DFT will vary dependent on substrate profile, application technique and waste factor.*
Note: DFT for 3-coursed rates includes 6 mils for the fabric.
[2]Flashing rates are based on a 6" (152 mm) width.

Acrylic Quick Spec

SMOOTH ASPHALTIC (LAR-6)

NOTE: The following "Quick Spec" is an abbreviated specification and is not meant to replace the detailed specification. Complete 3-part CSI System Specifications are available at www.gaf.com.

METHOD REQUIREMENTS

Required:

- ❍ Moisture survey required
- ❍ Remove and replace any wet areas
- ❍ Repair membrane with like materials
- ❍ Roof must be clean, dry and tight
- ❍ Apply at 50°F (10°C) and rising with no rain, dew, fog, or freezing temperatures in forecast for 8 hours
- ❍ Adhesion test required
- ❍ Power washing required
- ❍ New membranes should be aged at least 30 days; 90 days is ideal.

Restrictions:

Do not apply over gravel–surfaced substrates.

Recommendations:

- Refer to Technical Data Sheet for product specific application and surface temperature restrictions.

Installation Overview:

1. Before coating is applied, an adhesion test is required to ensure an adhesion minimum of 2.0 pounds per linear inch (PLI). Test patches should be applied with rates listed below.
2. Power-wash substrate to remove contaminants that could negatively affect adhesion. Allow roof to completely dry.
3. Prime per chart below.
4. Treat "alligatored" areas, surface cracks, roof penetrations, drains, curbs and scuppers. (Refer to Substrate Preparation section for requirements)
5. All loose seams must be 3-coursed. All other seams must be treated with flashing grade only, no fabric required. (Refer to Seam Treatment Guide for requirements)
6. Apply coating per the chart below:

CLEAN / PRIME+

	Product	Rate (Gal/Sq)
Cleaner	Cleaning Concentrate *(diluted)*	0.5 - 0.7
Primer[2]	Multi-Purpose Primer	.67 - 1.0

[2]When Acrylic Base Coat is used, primer is not required.

SEAMS & DETAILS

Treatment Type	Product	Total (Gal/Sq)	Total (linear ft/gal)+	DFT* (mils)
3-Coursed Rates	Premium Brush-Grade Acrylic Flashing and Fabric	4.0	30	43
Flashing Grade Only Rates	Premium Brush-Grade Acrylic Flashing	2.0	100	19

Note: For other product options, please refer to our Seam Treatment Guide.
+Flashing rates are based on a 6" (152 mm) width.

SMOOTH ASPHALTIC

Coverage Term	Coating				Total		Warranties/Guarantees Available	
	Product (Choose one)	1st Coat (Gal/Sq)[1]	2nd Coat (Gal/Sq)	3rd Coat (Gal/Sq)	Gal/Sq	DFT* (mils)	Emerald Pledge™	Diamond Pledge™
10 Year	Premium Acrylic HydroStop® Top Coat	1.50	1.50		3.00	25	Yes	No
	High Tensile Acrylic Top Coat	1.50	1.50		3.00	25		
	Acrylic Top Coat	1.50	1.50		3.00	25		
	WOB Acrylic TopCoat®	1.50	1.50		3.00	28		
15 Year	Premium Acrylic HydroStop® Top Coat	1.50	1.50	1.50	4.50	37	Yes	No
	High Tensile Acrylic Top Coat	1.50	1.50	1.50	4.50	38		
	Acrylic Top Coat	1.50	1.50	1.50	4.50	38		
	WOB Acrylic TopCoat®	1.50	1.50	1.50	4.50	42		

** Dry Film Thickness (DFT) is rounded to nearest mil, and is theoretical. Actual DFT will vary dependent on substrate profile, application technique and waste factor.*
[1]A Base Coat should be used as first coat.
Note: DFT for 3-coursed rates includes 6 mils for the fabric.

Acrylic Quick Spec

GRANULATED ASPHALTIC (LAR-7)

NOTE: The following "Quick Spec" is an abbreviated specification and is not meant to replace the detailed specification. Complete 3-part CSI System Specifications are available at www.gaf.com.

METHOD REQUIREMENTS

Required:

- ❍ Moisture survey required
- ❍ Remove and replace any wet areas
- ❍ Repair membrane with like materials
- ❍ Roof must be clean, dry and tight
- ❍ Apply at 50°F (10°C) and rising with no rain, dew, fog, or freezing temperatures in forecast for 8 hours
- ❍ Power washing required
- ❍ New membranes should be aged at least 30 days; 90 days is ideal.

Restrictions:

Do not apply over gravel–surfaced substrates.

Recommendations:

- Refer to Technical Data Sheet for product specific application and surface temperature restrictions.

Installation Overview:

1. Power-wash substrate to remove contaminants that could negatively affect adhesion. Allow roof to completely dry.
2. Prime per chart below.
3. Treat "alligatored" areas, surface cracks, roof penetrations, drains, curbs and scuppers. (Refer to Substrate Preparation section for requirements)
4. All loose seams must be 3-coursed. All other seams must be treated with flashing grade only, no fabric required. (Refer to Seam Treatment Guide for requirements)
5. Apply coating per the chart below:

CLEAN / PRIME+

	Product	Rate (Gal/Sq)
Cleaner	Cleaning Concentrate *(diluted)*	0.5 - 0.7
Primer[2]	Multi-Purpose Primer	1.0-1.3

[2]When Acrylic Base Coat is used, primer is not required.

SEAMS & DETAILS

Treatment Type	Product	Total (Gal/Sq)	Total (linear ft/gal)+	DFT* (mils)
3-Coursed Rates	Premium Brush-Grade Acrylic Flashing and Fabric	4.0	30	43
Flashing Grade Only Rates	Premium Brush-Grade Acrylic Flashing	2.0	100	19

Note: For other product options, please refer to our Seam Treatment Guide.
+Flashing rates are based on a 6" (152 mm) width.

GRANULATED ASPHALTIC

Coverage Term	Coating				Total		Warranties/Guarantees Available	
	Product (Choose one)	1st Coat (Gal/Sq)[1]	2nd Coat (Gal/Sq)	3rd Coat (Gal/Sq)	Gal/Sq	DFT* (mils)	Emerald Pledge™	Diamond Pledge™
10 Year	Premium Acrylic HydroStop® Top Coat	1.50	1.50		3.00	25	Yes	No
	High Tensile Acrylic Top Coat	1.50	1.50		3.00	25		
	Acrylic Top Coat	1.50	1.50		3.00	25		
	WOB Acrylic Top Coat®	1.50	1.50		3.00	28		
15 Year	Premium Acrylic HydroStop® Top Coat	1.50	1.50	1.50	4.50	37	Yes	No
	High Tensile Acrylic Top Coat	1.50	1.50	1.50	4.50	38		
	Acrylic Top Coat	1.50	1.50	1.50	4.50	38		
	WOB Acrylic TopCoat®	1.50	1.50	1.50	4.50	42		

** Dry Film Thickness (DFT) is rounded to nearest mil, and is theoretical. Actual DFT will vary dependent on substrate profile, application technique and waste factor.*
[1]A Base Coat should be used as first coat. When omitting primer, up to 1 gal/sq of additional base coat may be required to obtain a uniform coating surface.
Note: DFT for 3-coursed rates includes 6 mils for the fabric.

Acrylic Quick Spec

STRUCTURAL CONCRETE (LAR-8)

NOTE: The following "Quick Spec" is an abbreviated specification and is not meant to replace the detailed specification. Complete 3-part CSI System Specifications are available at www.gaf.com.

METHOD REQUIREMENTS

Required:

- ❍ Moisture survey required (must contain less than 8% moisture)
- ❍ Repair deteriorated sections with like materials. Allow repairs to cure properly.
- ❍ Roof must be clean, dry and tight
- ❍ Apply at 50°F (10°C) and rising with no rain, dew, fog, or freezing temperatures in forecast for 8 hours
- ❍ Adhesion test required
- ❍ Power washing required
- ❍ Concrete must be fully cured

Recommendations:

- Refer to Technical Data Sheet for product specific application and surface temperature restrictions.

Installation Overview:

1. Before coating is applied, an adhesion test is required to ensure an adhesion minimum of 2.0 pounds per linear inch (PLI). Test patches should be applied with rates listed below.
2. Power-wash substrate to remove contaminants that could negatively affect adhesion. Allow roof to completely dry.
3. Prime per chart below.
4. Treat all roof penetrations, drains, curbs, and scuppers. (Refer to Substrate Preparation section for requirements)
5. Treat structural joints with backer rod and compatible sealant prior to seam treatment. (Refer to Seam Treatment Guide for requirements)
6. Control joints in excess of 1/16" (1.6mm) shall also be caulked with a compatible caulk.
7. Apply coating per the chart below:

CLEAN / PRIME

	Product	Rate (Gal/Sq)
Cleaner	Cleaning Concentrate *(diluted)*	0.5 - 0.7
Primer	Epoxy Primer	0.3-0.4

SEAMS & DETAILS

Treatment Type	Product	Total (Gal/Sq)	Total (linear ft/gal)+	DFT* (mils)
3-Coursed Rates	Premium Brush-Grade Acrylic Flashing and Fabric	4.0	30	43
Flashing Grade Only Rates	Premium Brush-Grade Acrylic Flashing	2.0	100	19

Note: For other product options, please refer to our Seam Treatment Guide.
+Flashing rates are based on a 6" (152 mm) width.

STRUCTURAL CONCRETE

Coverage Term	Coating				Total		Warranties/Guarantees Available	
	Product (Choose one)	1st Coat (Gal/Sq)[1]	2nd Coat (Gal/Sq)	3rd Coat (Gal/Sq)	Gal/Sq	DFT* (mils)	Emerald Pledge™	Diamond Pledge™
10 Year	Premium Acrylic HydroStop® Top Coat	1.50	1.50		3.00	25	Yes	No
	High Tensile Acrylic Top Coat	1.50	1.50		3.00	25		
	Acrylic Top Coat	1.50	1.50		3.00	26		
	WOB Acrylic TopCoat®	1.50	1.50		3.00	28		
15 Year	Premium Acrylic HydroStop® Top Coat	1.50	1.50	1.00	4.00	33	Yes	No
	High Tensile Acrylic Top Coat	1.50	1.50	1.00	4.00	33		
	Acrylic Top Coat	1.50	1.50	1.00	4.00	34		
	WOB Acrylic TopCoat®	1.50	1.50	1.00	4.00	37		

** Dry Film Thickness (DFT) is rounded to nearest mil, and is theoretical. Actual DFT will vary dependent on substrate profile, application technique and waste factor.*
[1]A Base Coat should be used as first coat.
Note: DFT for 3-coursed rates includes 6 mils for the fabric.

Acrylic Quick Spec

CORRUGATED STRUCTURAL TRANSITE PANELS (LAR-9)

NOTE: The following "Quick Spec" is an abbreviated specification and is not meant to replace the detailed specification. Complete 3-part CSI System Specifications are available at www.gaf.com.

METHOD REQUIREMENTS

Required:

- ❍ Moisture survey required
- ❍ Remove and replace any wet areas
- ❍ Repair membrane with like materials
- ❍ Roof must be clean, dry and tight
- ❍ Apply at 50°F (10°C) and rising with no rain, dew, fog, or freezing temperatures in forecast for 8 hours
- ❍ Adhesion test required
- ❍ Power washing required

Recommendations:

- Refer to Technical Data Sheet for product specific application and surface temperature restrictions.

Installation Overview:

1. Before coating is applied, an adhesion test is required to ensure an adhesion minimum of 2.0 pounds per linear inch (PLI). Test patches should be applied with rates listed below.
2. Power-wash substrate to remove contaminants that could negatively affect adhesion. Allow roof to completely dry.
3. Tighten/replace existing fasteners. Encapsulate with appropriate flashing material.
4. Prime per chart below.
5. Treat all roof penetrations, drains, curbs, and scuppers. (Refer to Substrate Preparation section for requirements)
6. Treat transite gaps in excess of 1/16" with compatible caulk prior to seam treatment. (Refer to Substrate Preparation Seam Treatment Guide for requirements)
7. Apply coating per the chart below:

CLEAN / PRIME

	Product	Rate (Gal/Sq)
Cleaner	Cleaning Concentrate *(diluted)*	0.5 - 0.7
Primer	Epoxy Primer	0.3-0.4

SEAMS & DETAILS

Treatment Type	Product	Total (Gal/Sq)	Total (linear ft/gal)+	DFT* (mils)
3-Coursed Rates	Premium Brush-Grade Acrylic Flashing and Fabric	4.0	30	43
Flashing Grade Only Rates	Premium Brush-Grade Acrylic Flashing	2.0	100	19

Note: For other product options, please refer to our Seam Treatment Guide.
+Flashing rates are based on a 6" (152 mm) width.

CORRUGATED STRUCTURAL TRANSITE PANELS

Coverage Term	Coating				Total		Warranties/ Guarantees Available	
	Product (Choose one)	1st Coat (Gal/Sq)[1]	2nd Coat (Gal/Sq)	3rd Coat (Gal/Sq)	Gal/Sq	DFT* (mils)	Emerald Pledge™	Diamond Pledge™
10 Year	Premium Acrylic HydroStop® Top Coat	1.50	1.50		3.00	25	Yes	No
	High Tensile Acrylic Top Coat	1.50	1.50		3.00	25		
	Acrylic Top Coat	1.50	1.50		3.00	26		
	WOB Acrylic TopCoat®	1.50	1.50		3.00	28		
15 Year	Premium Acrylic HydroStop® Top Coat	1.50	1.50	1.00	4.00	33	Yes	No
	High Tensile Acrylic Top Coat	1.50	1.50	1.00	4.00	33		
	Acrylic Top Coat	1.50	1.50	1.00	4.00	34		
	WOB Acrylic TopCoat®	1.50	1.50	1.00	4.00	37		

** Dry Film Thickness (DFT) is rounded to nearest mil, and is theoretical. Actual DFT will vary dependent on substrate profile, application technique and waste factor.*
[1]A Base Coat should be used as first coat.
Note: DFT for 3-coursed rates includes 6 mils for the fabric.

IMPORTANT NOTE: Corrugated structural transite panels may contain asbestos. Follow all applicable local, state and federal regulations concerning asbestos. Under no circumstances does GAF have any liability for any damages, costs or expenses arising out of or associated with the pre-existing presence of asbestos-containing materials or any other allegedly hazardous substances or materials on the roof to which the new GAF roofing materials are being applied.

Acrylic Quick Spec

SPRAY POLYURETHANE FOAM (LAR-10)

NOTE: The following "Quick Spec" is an abbreviated specification and is not meant to replace the detailed specification. Complete 3-part CSI System Specifications are available at www.gaf.com.

METHOD REQUIREMENTS

Required:

- ❍ Moisture survey required
- ❍ Remove and replace any wet areas
- ❍ Repair substrate with like materials
- ❍ Roof must be clean, dry and tight
- ❍ Apply at 50°F (10°C) and rising with no rain, dew, fog, or freezing temperatures in forecast for 8 hours

Recommendations:

- For additional information regarding SPF, contact the specific SPF manufacturer and/or refer to sprayfoam.org
- Refer to Technical Data Sheet for product specific application and surface temperature restrictions.
- Optional: clean roofing granules may be embedded in final coat.

Installation Overview:

1. Treat all roof penetrations, drains, curbs, and scuppers. (Refer to Substrate Preparation section for requirements)
2. Apply coating per the chart below:

SEAMS & DETAILS[1]

Treatment Type	Product	Total (Gal/Sq)	Total (linear ft/gal)[+]	DFT* (mils)
3-Coursed Rates	Premium Brush-Grade Acrylic Flashing and Fabric	4.00	30	43

Note: For other product options, please refer to our Seam Treatment Guide.
[+]Flashing rates are based on a 6" (152 mm) width.

SPRAY POLYURETHANE FOAM

Coverage Term	Coating					Total		Warranties/ Guarantees Available	
	Product (Choose one)	1st Coat (Gal/Sq)[1]	2nd Coat (Gal/Sq)	3rd Coat (Gal/Sq)	4th Coat (Gal/Sq)	Gal/Sq	DFT* (mils)	Emerald Pledge™	Diamond Pledge™
10 Year	High Tensile Acrylic Top Coat	1.50	1.50			3.00	25	Yes	No
	Acrylic Top Coat	1.50	1.50			3.00	26		
15 Year	High Tensile Acrylic Top Coat	1.50	1.50	1.00		4.00	33	Yes	No
	Acrylic Top Coat	1.50	1.50	1.00		4.00	34		
20 Year	High Tensile Acrylic Top Coat	1.50	1.50	1.00	1.00	5.00	42	Yes	No
	Acrylic Top Coat	1.50	1.50	1.00	1.00	5.00	43		

** Dry Film Thickness (DFT) is rounded to nearest mil, and is theoretical. Actual DFT will vary dependent on substrate profile, application technique and waste factor.*
Note: DFT for 3-coursed rates includes 6 mils for the fabric.
[1] A base coat should be used as first coat.

DIATHON® QUICK SPEC DIRECTORY

Spec Number	Substrate Specification	Page #
LAR - 22	Spray Polyurethane Foam (SPF)	44

Quick Specs are abbreviated specifications and are not meant to replace detailed specifications. Complete 3-part CSI System Specifications are available at www.gaf.com.

Diathon® Quick Spec

SPRAY POLYURETHANE FOAM (LAR-22)

NOTE: The following "Quick Spec" is an abbreviated specification and is not meant to replace the detailed specification. Complete 3-part CSI System Specifications are available at www.gaf.com.

METHOD REQUIREMENTS

Required:

- ❍ Moisture survey required
- ❍ Remove and replace any wet areas
- ❍ Repair substrate with like materials
- ❍ Roof must be clean, dry and tight
- ❍ Apply at 50°F (10°C) and rising with no rain, dew, fog, or freezing temperatures in forecast for 8 hours

Recommendations:

- For additional information regarding SPF, contact the SPF manufaturer and/or refer to sprayfoam.org.
- Refer to Technical Data Sheet for product specific application and surface temperature restrictions.
- Optional: clean roofing granules may be embedded in final coat.

Installation Overview:

1. Treat all roof penetrations, drains, curbs, and scuppers. (Refer to Substrate Preparation section for requirements)
2. Apply coating per the chart below:

SEAMS & DETAILS[1]

Treatment Type	Product	Total (Gal/Sq)	Total (linear ft/gal)[+]	DFT* (mils)
3-Coursed Rates	Premium Brush-Grade Acrylic Flashing and Fabric	4.00	30	43

Note: For other product options, please refer to our Seam Treatment Guide.
[+]Flashing rates are based on a 6" (152 mm) width.

SPRAY POLYURETHANE FOAM

Coverage Term	Coating					Total		Warranties/ Guarantees Available	
	Product (Choose one)	1st Coat (Gal/Sq)[1]	2nd Coat (Gal/Sq)	3rd Coat (Gal/Sq)	4th Coat (Gal/Sq)	Gal/Sq	DFT* (mils)	Emerald Pledge™	Diamond Pledge™
10 Year	Diathon®	1.50	1.50			3.00	26	Yes	No
	Diathon® HT	1.50	1.50			3.00	25		
	Diathon® QS	1.50	1.50			3.00	26		
15 Year	Diathon®	1.50	1.50	1.00		4.00	34	Yes	No
	Diathon® HT	1.50	1.50	1.00		4.00	33		
	Diathon® QS	1.50	1.50	1.00		4.00	34		
20 Year	Diathon®	1.50	1.50	1.00	1.00	5.00	43	Yes	No
	Diathon® HT	1.50	1.50	1.00	1.00	5.00	42		
	Diathon® QS	1.50	1.50	1.00	1.00	5.00	43		

** Dry Film Thickness (DFT) is rounded to nearest mil, and is theoretical. Actual DFT will vary dependent on substrate profile, application technique and waste factor.*
Note: DFT for 3-coursed rates includes 6 mils for the fabric.
[1] A base coat should be used as first coat.

PREMIUM ACRYLIC HYDROSTOP® FABRIC REINFORCED QUICK SPEC DIRECTORY

Spec Number	Substrate Specification	Page #
LAR-11	Smooth Asphaltic	46
LAR-12	Granulated Asphaltic	47
LAR-13	Aged TPO	48
LAR-14	Aged PVC	49
LAR-16	EPDM	50
LAR-17	Structural Concrete	51
LAR-18	Corrugated Structural Transite Panels	52
LAR-19	Polyisocyanurate	53
LAR-20	Gypsum Roof Board	54
LAR-21	Warranty/Guarantee Extension/Renewal	55

Quick Specs are abbreviated specifications and are not meant to replace detailed specifications. Complete 3-part CSI System Specifications are available at www.gaf.com.

PREMIUM ACRYLIC HYDROSTOP® FABRIC REINFORCED QUICK SPEC

SMOOTH ASPHALTIC (LAR-11)

NOTE: *The following "Quick Spec" is an abbreviated specification and is not meant to replace the detailed specification. Complete 3-part CSI System Specifications are available at www.gaf.com.*

METHOD REQUIREMENTS

Required:

- ❍ Moisture survey required.
- ❍ Remove and replace any wet areas.
- ❍ Repair membrane with like materials.
- ❍ Roof must be clean, dry, and tight.
- ❍ Adhesion test required.
- ❍ Apply at 50°F (10°C) and rising with no rain, dew, fog or freezing temperatures in the forecast for 8 hours.
- ❍ New asphaltic membranes should be aged at least 30 days; 90+ days is ideal.

Restrictions:

Do not apply over gravel–surfaced asphaltic substrate.

Recommendations:

- Refer to Technical Data Sheet for product specific application and surface temperature restrictions.

Installation Overview:

1. Before coating is applied, an adhesion test is required to ensure an adhesion of a minimum of 2.0 PLI. Test patches to be applied with system rates listed below.
2. Power wash substrate to remove contaminants that could negatively affect adhesion.
3. Prime per chart below.
4. Treat "alligatored" areas or surface cracks, roof penetrations, drains, curbs and scuppers.
5. Apply coating per the chart below.

CLEAN/ PRIME

	Product	Rate (Gal/Sq)
Cleaner	Cleaning Concentrate (diluted)	0.5 - 0.7
Primer	UniBase Primer	0.5-1.0

SEAMS & DETAILS

Treatment Type	Product	Total (Gal/Sq)	Total (linear ft/gal)+	DFT* (mils)
3-Coursed Rates	Premium Brush-Grade Acrylic Flashing and Premium Fabric	4.0	30	43
Flashing Grade Only Rates	Premium Brush-Grade Acrylic Flashing	2.0	100	19

Note: For other product options, please refer to our Seam Treatment Guide.
+Flashing rates are based on a 6" (152 mm) width.

SMOOTH ASPHALTIC

	Premium Acrylic HydroStop® Base Coat (with fabric)		Premium Acrylic HydroStop® Top Coat				System		Warranties/ Guarantees Available	
	Total (Gal/Sq)	DFT* (mils)	1st Coat (Gal/Sq)[1]	2nd Coat (Gal/Sq)	Total (Gal/Sq)	DFT* (mils)	Total (Gal/Sq)	DFT* (mils)	Emerald Pledge™	Diamond Pledge™
10 Year	2.5	27	.75	.75	1.50	13	4.00	40	Yes	Yes
15 Year	2.5	27	1.00	1.00	2.00	17	4.50	44	Yes	Yes
20 Year	2.5	27	1.50	1.50	3.00	25	5.50	52	Yes	Yes

** Dry Film Thickness (DFT) is rounded to nearest mil, and is theoretical. Actual DFT will vary dependent on substrate profile, application technique and waste factor.*
Note: DFT for 3-coursed rates includes 6 mils for the fabric.

PREMIUM ACRYLIC HYDROSTOP® FABRIC REINFORCED QUICK SPEC

GRANULATED ASPHALTIC (HS-12)

NOTE: *The following "Quick Spec" is an abbreviated specification and is not meant to replace the detailed specification. Complete 3-part CSI System Specifications are available at www.gaf.com.*

METHOD REQUIREMENTS

Required:

- ❍ Moisture survey required.
- ❍ Remove and replace any wet areas.
- ❍ Repair membrane with like materials.
- ❍ Roof must be clean, dry, and tight.
- ❍ Apply at 50°F (10°C) and rising with no rain, dew, fog or freezing temperatures in the forecast for 8 hours.
- ❍ New asphaltic membranes should be aged at least 30 days; 90+ days is ideal.

Restrictions:

Do not apply over gravel–surfaced asphaltic substrate.

Recommendations:

- Refer to Technical Data Sheet for product specific application and surface temperature restrictions.

Installation Overview:

1. Power wash substrate to remove contaminants that could negatively affect adhesion.
2. Treat "alligatored" areas, surface cracks, roof penetrations, drains, curbs and scuppers (Refer to Substrate Preparation section for requirements).
3. Apply coating per the chart below.

CLEAN/ PRIME

	Product	Rate (Gal/Sq)
Cleaner	Cleaning Concentrate (diluted)	0.5 - 0.7
Primer[3]	Not required	N/A

*[3]All new asphaltic seams and repairs **MUST** be treated with either HydroStop® Base Coat and Fabric OR primed with Multi-Purpose Primer for protection against asphalt bleed lines.*

SEAMS & DETAILS

Treatment Type	Product	Total (Gal/Sq)	Total (linear ft/gal)+	DFT* (mils)
3-Coursed Rates	Premium Brush-Grade Acrylic Flashing and Premium Fabric	4.0	30	43
Flashing Grade Only Rates	Premium Brush-Grade Acrylic Flashing	2.0	100	19

Note: For other product options, please refer to our Seam Treatment Guide.
+Flashing rates are based on a 6" (152 mm) width.

GRANULATED ASPHALTIC

	Premium Acrylic HydroStop® Base Coat (with fabric)		Premium Acrylic HydroStop® Top Coat				System		Warranties/ Guarantees Available	
	Total (Gal/Sq)	DFT* (mils)	1st Coat (Gal/Sq)	2nd Coat (Gal/Sq)	Total (Gal/Sq)	DFT* (mils)	Total (Gal/Sq)	DFT* (mils)	Emerald Pledge™	Diamond Pledge™
10 Year	2.5	27	.75	.75	1.50	13	4.00	40	Yes	Yes
15 Year	2.5	27	1.00	1.00	2.00	17	4.50	44	Yes	Yes
20 Year	2.5	27	1.50	1.50	3.00	25	5.50	52	Yes	Yes

** Dry Film Thickness (DFT) is rounded to nearest mil, and is theoretical. Actual DFT will vary dependent on substrate profile, application technique and waste factor.*
Note: DFT for 3-coursed rates includes 6 mils for the fabric.
Up to 1 gal/sq of additional Premium Acrylic HydroStop Base Coat may be required to obtain a uniform coating surface.

PREMIUM ACRYLIC HYDROSTOP® FABRIC REINFORCED QUICK SPEC

AGED TPO (HS-13)

NOTE: *The following "Quick Spec" is an abbreviated specification and is not meant to replace the detailed specification. Complete 3-part CSI System Specifications are available at www.gaf.com.*

METHOD REQUIREMENTS

Required:

- ❍ Moisture survey required.
- ❍ Remove and replace any wet areas.
- ❍ Repair membrane with like materials[2].
- ❍ Roof must be clean, dry, and tight.
- ❍ Adhesion test required[2].
- ❍ Apply at 50°F (10°C) and rising with no rain, dew, fog or freezing temperatures in the forecast for 8 hours.

Recommendations:

- Refer to Technical Data Sheet for product specific application and surface temperature restrictions.

Installation Overview:

1. Before coating is applied, an adhesion test is required to ensure an adhesion of a minimum of 2.0 PLI. Test patches to be applied with system rates listed below[2].
2. Power wash substrate to remove contaminants that could negatively affect adhesion.
3. Prime per chart below.
4. Treat all roof penetrations, drains, curbs, and scuppers.
5. Apply coating per the chart below.

CLEAN/ PRIME

	Product	Rate (Gal/Sq)
Cleaner	Cleaning Concentrate (diluted)	0.5 - 0.7

SEAMS & DETAILS

Treatment Type	Product	Total (Gal/Sq)	Total (linear ft/gal)+	DFT* (mils)
3-Coursed Rates	Premium Brush-Grade Acrylic Flashing and Premium Fabric	4.0	30	43
Flashing Grade Only Rates	Premium Brush-Grade Acrylic Flashing	2.0	100	19

Note: For other product options, please refer to our Seam Treatment Guide.
+Flashing rates are based on a 6" (152 mm) width.

AGED TPO

	Premium Acrylic HydroStop® Base Coat (with fabric)		Premium Acrylic HydroStop® Top Coat				System		Warranties/ Guarantees Available	
	Total (Gal/Sq)	DFT* (mils)	1st Coat (Gal/Sq)	2nd Coat (Gal/Sq)	Total (Gal/Sq)	DFT* (mils)	Total (Gal/Sq)	DFT* (mils)	Emerald Pledge™	Diamond Pledge™
10 Year	2.5	27	.75	.75	1.50	13	4.00	40	Yes	Yes
15 Year	2.5	27	1.00	1.00	2.00	17	4.50	44	Yes	Yes
20 Year	2.5	27	1.50	1.50	3.00	25	5.50	52	Yes	Yes

** Dry Film Thickness (DFT) is rounded to nearest mil, and is theoretical. Actual DFT will vary dependent on substrate profile, application technique and waste factor.*
Note: DFT for 3-coursed rates includes 6 mils for the fabric.
[2]For new TPO or when 2 PLI is not met, contact GAF Design Services

PREMIUM ACRYLIC HYDROSTOP® FABRIC REINFORCED QUICK SPEC

AGED PVC (HS-14)

NOTE: *The following "Quick Spec" is an abbreviated specification and is not meant to replace the detailed specification. Complete 3-part CSI System Specifications are available at www.gaf.com.*

METHOD REQUIREMENTS

Required:

- ❍ Moisture survey required.
- ❍ Roof must be clean, dry, and tight.
- ❍ Remove and replace any wet areas.
- ❍ Repair membrane with like materials.
- ❍ Adhesion test required.
- ❍ Apply at 50°F (10°C) and rising with no rain, dew, fog or freezing temperatures in the forecast for 8 hours.

Recommendations:

- Refer to Technical Data Sheet for product specific application and surface temperature restrictions.

Installation Overview:

1. Before applying the coating, an adhesion test is required to ensure an adhesion of a minimum of 2.0 PLI. Test patches to be applied with system rates listed below.
2. Power wash substrate to remove contaminants that could negatively affect adhesion.
3. Treat all roof penetrations, drains, curbs, and scuppers.
4. Apply coating per the chart below.

CLEAN / PRIME

	Product	Rate (Gal/Sq)
Cleaner	Cleaning Concentrate *(diluted)*	0.5 - 0.7
Primer	Multi-Purpose Primer	0.33

SEAMS & DETAILS

Treatment Type	Product	Total (Gal/Sq)	Total (linear ft/gal)+	DFT* (mils)
3-Coursed Rates	Premium Brush-Grade Acrylic Flashing and Premium Fabric	4.0	30	43
Flashing Grade Only Rates	Premium Brush-Grade Acrylic Flashing	2.0	100	19

Note: For other product options, please refer to our Seam Treatment Guide.
+Flashing rates are based on a 6" (152 mm) width.

AGED PVC

	Premium Acrylic HydroStop® Base Coat (with fabric)		Premium Acrylic HydroStop® Top Coat				System		Warranties/ Guarantees Available	
	Total (Gal/Sq)	DFT* (mils)	1st Coat (Gal/Sq)	2nd Coat (Gal/Sq)	Total (Gal/Sq)	DFT* (mils)	Total (Gal/Sq)	DFT* (mils)	Emerald Pledge™	Diamond Pledge™
10 Year	2.5	27	.75	.75	1.50	13	4.00	40	Yes	Yes
15 Year	2.5	27	1.00	1.00	2.00	17	4.50	44	Yes	Yes
20 Year	2.5	27	1.50	1.50	3.00	25	5.50	52	Yes	Yes

** Dry Film Thickness (DFT) is rounded to nearest mil, and is theoretical. Actual DFT will vary dependent on substrate profile, application technique and waste factor.*
Note: DFT for 3-coursed rates includes 6 mils for the fabric.

PREMIUM ACRYLIC HYDROSTOP® FABRIC REINFORCED QUICK SPEC

EPDM (HS-16)

NOTE: *The following "Quick Spec" is an abbreviated specification and is not meant to replace the detailed specification. Complete 3-part CSI System Specifications are available at www.gaf.com.*

METHOD REQUIREMENTS

Required:

- Moisture survey required.
- Roof must be clean, dry, and tight.
- Remove and replace any wet areas.
- Repair membrane with like materials.
- Adhesion test required.
- Apply at 50°F (10°C) and rising with no rain, dew, fog or freezing temperatures in the forecast for 8 hours.

Recommendations:

- Refer to Technical Data Sheet for product specific application and surface temperature restrictions.

Installation Overview:

1. Before coating is applied, an adhesion test is required to ensure an adhesion of a minimum of 2.0 PLI. Test patches to be applied with system rates listed below.
2. Clean roof to remove contaminants that could negatively affect adhesion. Allow roof to completely dry.
3. Treat all roof penetrations, drains, curbs, and scuppers.
4. Apply coating per the chart below.

CLEAN/ PRIME

	Product	Rate (Gal/Sq)
Cleaner[2]	Cleaning Concentrate (diluted)	0.5 - 0.7
Primer	EPDM Activator	0.20

[2]Cleaner is only required for heavy dirt build up.

SEAMS & DETAILS

Treatment Type	Product	Total (Gal/Sq)	Total (linear ft/gal)[+]	DFT* (mils)
3-Coursed Rates	Premium Brush-Grade Acrylic Flashing and Fabric	4.0	30	43
Flashing Grade Only Rates	Premium Brush-Grade Acrylic Flashing	2.0	100	19

Note: For other product options, please refer to our Seam Treatment Guide.
[+]Flashing rates are based on a 6" (152 mm) width.

EPDM

	Premium Acrylic HydroStop® Base Coat (with fabric)		Premium Acrylic HydroStop® Top Coat				System		Warranties/ Guarantees Available	
	Total (Gal/Sq)	DFT* (mils)	1st Coat (Gal/Sq)	2nd Coat (Gal/Sq)	Total (Gal/Sq)	DFT* (mils)	Total (Gal/Sq)	DFT* (mils)	Emerald Pledge™	Diamond Pledge™
10 Year	2.5	27	.75	.75	1.50	13	4.00	40	Yes	Yes
15 Year	2.5	27	1.00	1.00	2.00	17	4.50	44	Yes	Yes
20 Year	2.5	27	1.50	1.50	3.00	25	5.50	52	Yes	Yes

** Dry Film Thickness (DFT) is rounded to nearest mil, and is theoretical. Actual DFT will vary dependent on substrate profile, application technique and waste factor.*
Note: DFT for 3-coursed rates includes 6 mils for the fabric.

PREMIUM ACRYLIC HYDROSTOP® FABRIC REINFORCED QUICK SPEC

STRUCTURAL CONCRETE (HS-17)

NOTE: *The following "Quick Spec" is an abbreviated specification and is not meant to replace the detailed specification. Complete 3-part CSI System Specifications are available at www.gaf.com.*

METHOD REQUIREMENTS

Required:

- ❍ Moisture survey required (must contain less than 8% moisture).
- ❍ Roof must be clean, dry, and tight.
- ❍ Repair deteriorated sections with like materials. Allow repairs to cure properly.
- ❍ Adhesion test required.
- ❍ Concrete must be fully cured.
- ❍ Apply at 50°F (10°C) and rising with no rain, dew, fog or freezing temperatures in the forecast for 8 hours.

Recommendations:

- Refer to Technical Data Sheet for product specific application and surface temperature restrictions.

Installation Overview:

1. Before coating is applied, an adhesion test is required to ensure an adhesion of a minimum of 2.0 PLI. Test patches to be applied with system rates listed below.
2. Power wash roof to ensure it is free of dirt, debris, oil, and other contaminants that could negatively affect adhesion. Allow roof to completely dry.
3. Prime per the chart below.
4. Treat structural joints with backer rod and compatible sealant.
5. Control joints in excess of 1/16" (1.6 mm) shall also be caulked with a compatible caulk.
6. Treat all roof penetrations, drains, curbs, caulked control joints, and scuppers.
7. Apply coating per the chart below.

CLEAN/ PRIME

	Product	Rate (Gal/Sq)
Cleaner	Cleaning Concentrate (diluted)	0.5 - 0.7
Primer	Epoxy Primer	0.3 - 0.4

SEAMS & DETAILS

Treatment Type	Product	Total (Gal/Sq)	Total (linear ft/gal)+	DFT* (mils)
3-Coursed Rates	Premium Brush-Grade Acrylic Flashing and Fabric	4.0	30	43
Flashing Grade Only Rates	Premium Brush-Grade Acrylic Flashing	2.0	100	19

Note: For other product options, please refer to our Seam Treatment Guide.
+Flashing rates are based on a 6" (152 mm) width.

STRUCTURAL CONCRETE

	Premium Acrylic HydroStop® Base Coat (with fabric)		Premium Acrylic HydroStop® Top Coat				System		Warranties/ Guarantees Available	
	Total (Gal/Sq)	DFT* (mils)	1st Coat (Gal/Sq)	2nd Coat (Gal/Sq)	Total (Gal/Sq)	DFT* (mils)	Total (Gal/Sq)	DFT* (mils)	Emerald Pledge™	Diamond Pledge™
10 Year	2.5	27	.75	.75	1.50	13	4.00	40	Yes	Yes
15 Year	2.5	27	1.00	1.00	2.00	17	4.50	44	Yes	Yes
20 Year	2.5	27	1.50	1.50	3.00	25	5.50	52	Yes	Yes

** Dry Film Thickness (DFT) is rounded to nearest mil, and is theoretical. Actual DFT will vary dependent on substrate profile, application technique and waste factor.*
Note: DFT for 3-coursed rates includes 6 mils for the fabric.

PREMIUM ACRYLIC HYDROSTOP® FABRIC REINFORCED QUICK SPEC

CORRUGATED STRUCTURAL TRANSITE PANELS (HS-18)

NOTE: *The following "Quick Spec" is an abbreviated specification and is not meant to replace the detailed specification. Complete 3-part CSI System Specifications are available at www.gaf.com.*

METHOD REQUIREMENTS

Required:

- ❍ Moisture survey required.
- ❍ Roof must be clean, dry, and tight.
- ❍ Remove and replace any wet areas.
- ❍ Repair membrane with like materials.
- ❍ Adhesion test required.
- ❍ Apply at 50°F (10°C) and rising with no rain, dew, fog or freezing temperatures in the forecast for 8 hours.

Recommendations:

- Refer to Technical Data Sheet for product specific application and surface temperature restrictions.

Installation Overview:

1. Before coating is applied, an adhesion test is required to ensure an adhesion of a minimum of 2.0 PLI. Test patches to be applied with system rates listed below.
2. Power wash roof to ensure it is free of dirt, debris, oil, and other contaminants that could negatively affect adhesion. Allow to completely dry.
3. Prime per chart below.
4. Treat transite gaps in excess of 1/16" (1.6 mm) with a compatible caulk.
5. Treat all roof penetrations, drains, curbs, caulked gaps, and scuppers.
6. Apply coating per the chart below.

CLEAN/ PRIME

	Product	Rate (Gal/Sq)
Cleaner	Cleaning Concentrate (diluted)	0.5 - 0.7
Primer	Epoxy Primer	0.3 - 0.4

SEAMS & DETAILS

Treatment Type	Product	Total (Gal/Sq)	Total (linear ft/gal)+	DFT* (mils)
3-Coursed Rates	Premium Brush-Grade Acrylic Flashing and Fabric	4.0	30	43
Flashing Grade Only Rates	Premium Brush-Grade Acrylic Flashing	2.0	100	19

Note: For other product options, please refer to our Seam Treatment Guide.
+Flashing rates are based on a 6" (152 mm) width.

CORRUGATED STRUCTURAL TRANSITE PANEL

	Premium Acrylic HydroStop® Base Coat (with fabric)		Premium Acrylic HydroStop® Top Coat				System		Warranties/ Guarantees Available	
	Total (Gal/Sq)	DFT* (mils)	1st Coat (Gal/Sq)	2nd Coat (Gal/Sq)	Total (Gal/Sq)	DFT* (mils)	Total (Gal/Sq)	DFT* (mils)	Emerald Pledge™	Diamond Pledge™
10 Year	2.5	27	.75	.75	1.50	13	4.00	40	Yes	Yes
15 Year	2.5	27	1.00	1.00	2.00	17	4.50	44	Yes	Yes
20 Year	2.5	27	1.50	1.50	3.00	25	5.50	52	Yes	Yes

** Dry Film Thickness (DFT) is rounded to nearest mil, and is theoretical. Actual DFT will vary dependent on substrate profile, application technique and waste factor.*
Note: DFT for 3-coursed rates includes 6 mils for the fabric.

IMPORTANT NOTE: Corrugated structural transite panels may contain asbestos. Follow all applicable local, state and federal regulations concerning asbestos. Under no circumstances does GAF have any liability for any damages, costs or expenses arising out of or associated with the pre-existing presence of asbestos-containing materials or any other allegedly hazardous substances or materials on the roof to which the new GAF roofing materials are being applied.

PREMIUM ACRYLIC HYDROSTOP® FABRIC REINFORCED QUICK SPEC

POLYISOCYANURATE (POLYISO) (HS-19)

NOTE: *The following "Quick Spec" is an abbreviated specification and is not meant to replace the detailed specification. Complete 3-part CSI System Specifications are available at www.gaf.com.*

METHOD REQUIREMENTS

Required:

- ❍ Roof must be clean, dry, and tight.
- ❍ Adhesion test required.
- ❍ Recover over an existing roof: one (1) layer of Polyiso is required. Refer to local building code and manufacturer's instructions for further insulation requirements.
- ❍ New construction or tear-off: one (1) layer of Polyiso & minimum 1/4" (6.35 mm) gypsum roof coverboard OR two (2) layers of adhered staggered Polyiso. If the top layer is mechanically attached, plates must be encapsulated with Premium Brush-Grade Flashing Flashing.
- ❍ Apply at 50°F (10°C) and rising with no rain, dew, fog or freezing temperatures in the forecast for 8 hours.

Recommendations:

- Refer to Technical Data Sheet for product specific application and surface temperature restrictions.

Installation Overview:

1. Before coating is applied, an adhesion test is required to ensure an adhesion of a minimum of 2.0 PLI. Test patches to be applied with system rates listed below.
2. Ensure roof is free of dirt, debris, oil, and other contaminants that could negatively affect adhesion.
3. All seams must be 3-coursed with flashing grade and fabric.
4. Apply coating per the chart below.

PRIME

Facer Type	Product	Rate (Gal/Sq)
GRF	Not Required	N/A
CGF	Multi-Purpose Primer	0.3

GRF - Glass-reinforced (Cellulosic Felt) Facer
CGF - Coated Glass Facer

SEAMS & DETAILS

Treatment Type	Product	Total (Gal/Sq)	Total (linear ft/gal)+	DFT* (mils)
3-Coursed Rates	Premium Brush-Grade Acrylic Flashing and Fabric	4.0	30	43
Flashing Grade Only Rates	Premium Brush-Grade Acrylic Flashing	2.0	100	19

Note: For other product options, please refer to our Seam Treatment Guide.
+Flashing rates are based on a 6" (152 mm) width.

POLYISO

	Premium Acrylic HydroStop® Base Coat (with fabric)		Premium Acrylic HydroStop® Top Coat				System		Warranties/ Guarantees Available	
	Total (Gal/Sq)	DFT* (mils)	1st Coat (Gal/Sq)	2nd Coat (Gal/Sq)	Total (Gal/Sq)	DFT* (mils)	Total (Gal/Sq)	DFT* (mils)	Emerald Pledge™	Diamond Pledge™
10 Year	2.5	27	.75	.75	1.50	13	4.00	40	Yes	Yes
15 Year	2.5	27	1.00	1.00	2.00	17	4.50	44	Yes	Yes
20 Year	2.5	27	1.50	1.50	3.00	25	5.50	52	Yes	Yes

** Dry Film Thickness (DFT) is rounded to nearest mil, and is theoretical. Actual DFT will vary dependent on substrate profile, application technique and waste factor.*
Note: DFT for 3-coursed rates includes 6 mils for the fabric.
Up to 1 gal/sq of additional Permium Acrylic HydroStop Base Coat may be required to obtain a uniform coating surface.

PREMIUM ACRYLIC HYDROSTOP® FABRIC REINFORCED QUICK SPEC

GYPSUM ROOF BOARD (DENSDECK® PRIME & SECUROCK®) (HS-20)

NOTE: *The following "Quick Spec" is an abbreviated specification and is not meant to replace the detailed specification. Complete 3-part CSI System Specifications are available at www.gaf.com.*

METHOD REQUIREMENTS

Required:

- ❍ Roof must be clean, dry, and tight.
- ❍ If mechanically attached, plates must be encapsulated with Premium Brush-Grade Flashing.
- ❍ The gypsum roof board should be at least 1/2" (12 mm) thick. Refer to local building code and manufacturer's instructions for further coverboard and insulation requirements.
- ❍ Apply at 50°F (10°C) and rising with no rain, dew, fog or freezing temperatures in the forecast for 8 hours.

Recommendations:

- Refer to Technical Data Sheet for product specific application and surface temperature restrictions.
- Using a compatible pre-primed gypsum board can prevent additional coating from being soaked into the board and is preferred.

Installation Overview:

1. Ensure roof is free of dirt, debris, oil, and other contaminants that could negatively affect adhesion.
2. All seams must be 3-coursed with flashing grade and fabric.
3. Apply coating per the chart below.

SEAMS & DETAILS

Treatment Type	Product	Total (Gal/Sq)	Total (linear ft/gal)+	DFT* (mils)
3-Coursed Rates	Premium Brush-Grade Acrylic Flashing and Fabric	4.0	30	43
Flashing Grade Only Rates	Premium Brush-Grade Acrylic Flashing	2.0	100	19

Note: For other product options, please refer to our Seam Treatment Guide.
+Flashing rates are based on a 6" (152 mm) width.

GYPSUM ROOF BOARD (DENSDECK® PRIME & SECUROCK®)

	Premium Acrylic HydroStop® Base Coat (with fabric)		Premium Acrylic HydroStop® Top Coat				System		Warranties/ Guarantees Available	
	Total (Gal/Sq)	DFT* (mils)	1st Coat (Gal/Sq)	2nd Coat (Gal/Sq)	Total (Gal/Sq)	DFT* (mils)	Total (Gal/Sq)	DFT* (mils)	Emerald Pledge™	Diamond Pledge™
10 Year	2.5	27	.75	.75	1.50	13	4.00	40	Yes	Yes
15 Year	2.5	27	1.00	1.00	2.00	17	4.50	44	Yes	Yes
20 Year	2.5	27	1.50	1.50	3.00	25	5.50	52	Yes	Yes

** Dry Film Thickness (DFT) is rounded to nearest mil, and is theoretical. Actual DFT will vary dependent on substrate profile, application technique and waste factor.*
Note: DFT for 3-coursed rates includes 6 mils for the fabric.
DensDeck® is a registered trademark of Georgia-Pacific Gypsum LLC.
SECUROCK® is a registered trademark of United States Gypsum Company.

PREMIUM ACRYLIC HYDROSTOP® FABRIC REINFORCED QUICK SPEC

WARRANTY/GUARANTEE EXTENSION/RENEWAL (HS-21)

NOTE: *The following "Quick Spec" is an abbreviated specification and is not meant to replace the detailed specification. Complete 3-part CSI System Specifications are available at www.gaf.com.*

METHOD REQUIREMENTS

Required:

- ❍ The existing HydroStop® Roofing System must be inspected by GAF's Field Services to determine eligibility for recoat.
- ❍ Roof must be clean, dry, and tight.
- ❍ Adhesion test required.
- ❍ Apply at 50°F (10°C) and rising with no rain, dew, fog or freezing temperatures in the forecast for 8 hours.

Recommendations:

- Refer to Technical Data Sheet for product specific application and surface temperature restrictions.

Installation Overview:

1. Roof must be inspected by GAF Field Services before work begins. Any issues found during the inspection must be repaired prior to the application.
2. Before coating is applied, an adhesion test is required to ensure an adhesion minimum of 2.0 pounds per linear inch (PLI). Test patches should be applied with rates listed below.
3. Power wash substrate to remove contaminants that could negatively affect adhesion.
4. Any loose or damaged flashing application must be 3-coursed.
5. Apply coating per the chart below.

CLEAN

	Product	Rate (Gal/Sq)
Cleaner	Cleaning Concentrate (diluted)	0.5 - 0.7

SEAMS & DETAILS

Treatment Type	Product	Total (Gal/Sq)	Total (linear ft/gal)+	DFT* (mils)
3-Coursed Rates	Premium Brush-Grade Acrylic Flashing and Fabric	4.0	30	43
Flashing Grade Only Rates	Premium Brush-Grade Acrylic Flashing	2.0	100	19

Note: For other product options, please refer to our Seam Treatment Guide.
+Flashing rates are based on a 6" (152 mm) width.

WARRANTY/GUARANTEE EXTENSION/RENEWAL

	Premium Acrylic HydroStop® Top Coat				Warranties/Guarantees Available	
	1st Coat (Gal/Sq)	2nd Coat (Gal/Sq)	Total (Gal/Sq)	DFT* (mils)	Emerald Pledge™	Diamond Pledge™
10 Year	0.75	0.75	1.50	13	Yes	Yes
15 Year	1.00	1.00	2.00	17	Yes	Yes

** Dry Film Thickness (DFT) is rounded to nearest mil, and is theoretical. Actual DFT will vary dependent on substrate profile, application technique and waste factor.*
Note: DFT for 3-coursed rates includes 6 mils for the fabric.

UNISIL QUICK SPEC DIRECTORY

Spec Number	Substrate Specification	Page #
UN-1	Metal	57
UN-2	Aged PVC	58
UN-4	EPDM	59
UN-5	Smooth Asphaltic	60
UN-6	Granulated Asphaltic	61
UN-7	Structural Concrete	62
UN-8	Corrugated Structural Transite Panels	63
UN-9	Spray Polyurethane Foam (SPF)	64
UN-10	Aged TPO	65

Quick Specs are abbreviated specifications and are not meant to replace detailed specifications. Complete 3-part CSI System Specifications are available at www.gaf.com.

UNISIL QUICK SPEC

METAL (UN-1)

NOTE: The following "Quick Spec" is an abbreviated specification and is not meant to replace the detailed specification. Complete 3-part CSI System Specifications are available at www.gaf.com.

METHOD REQUIREMENTS

Required:

- ❍ Roof must be clean, dry and tight
- ❍ Apply at 40°F (4°C) and rising with no rain, dew, fog or freezing temperatures in forecast for 8 hours
- ❍ Adhesion test required
- ❍ Power washing required
- ❍ Rust should be removed with a wire brush prior to coating, and structural repairs should be made with like materials as needed.

Recommendations:

- Refer to Technical Data Sheet for product specific application and surface temperature restrictions.

Installation Overview:

1. Before coating is applied, an adhesion test is required to ensure an adhesion minimum of 2.0 pounds per linear inch (PLI). Test patches should be applied with rates listed below.
2. Tighten/replace existing fasteners. Encapsulate with appropriate flashing material.
3. Power-wash substrate to remove contaminants that could negatively affect adhesion. Allow roof to completely dry.
4. Install crickets to divert water and complete any other necessary sheet metal repairs.
5. Treat all roof penetrations, drains, curbs, and scuppers. (Refer to Substrate Preparation section for requirements)
6. If horizontal seams have gaps larger then 1/8"when pressure is applied at the lower panel add additional stitch screws and treat with flashing grade only.
7. Overlap seams must be treated with flashing grade. All other seams may forgo treatment **IF** the seal/tape is intact on the seam or if they are double locked. (Refer to Seam Treatment Guide for requirements)
8. Apply coating per the chart below:

CLEAN

	Product	Rate (Gal/Sq)
Cleaner	Cleaning Concentrate (diluted)	0.5 - 0.7

SEAMS & DETAILS

Treatment Type	Product	Total (Gal/Sq)	Total (linear ft/gal)+	DFT* (mils)
3-Coursed Rates	Silicone Mastic and Fabric	2.50	75	45
Flashing Grade Only Rates	Silicone Mastic	4.00	50	60

Note: For other product options, please refer to our Seam Treatment Guide.
+Flashing rates are based on a 6" (152 mm) width.

METAL

Coverage Term	Coating			Total		Warranties/Guarantees Available	
	1st Coat (Gal/Sq)	2nd Coat (Gal/Sq)	3rd Coat (Gal/Sq)	Gal/Sq	DFT* (mils)	Emerald Pledge™	Diamond Pledge™
10 Year	1.00	1.00		2.00	23	Yes	Yes
15 Year	1.25	1.50		2.75	31	Yes	Yes
20 Year	1.00	1.50	1.00	3.50	40	Yes	Yes

** Dry Film Thickness (DFT) is rounded to nearest mil, and is theoretical. Actual DFT will vary dependent on substrate profile, application technique and waste factor.*
Note: DFT for 3-coursed rates includes 6 mils for the fabric.

UNISIL QUICK SPEC

AGED PVC (UN-2)

NOTE: The following "Quick Spec" is an abbreviated specification and is not meant to replace the detailed specification. Complete 3-part CSI System Specifications are available at www.gaf.com.

METHOD REQUIREMENTS

Required:

- ❍ Moisture survey required
- ❍ Remove and replace any wet areas
- ❍ Repair membrane with like materials
- ❍ Roof must be clean, dry and tight
- ❍ Apply at 40°F (4°C) and rising with no rain, dew, fog or freezing temperatures in forecast for 8 hours
- ❍ Adhesion test required
- ❍ Power washing required

Recommendations:

- Refer to Technical Data Sheet for product specific application and surface temperature restrictions.

Installation Overview:

1. Before coating is applied, an adhesion test is required to ensure an adhesion minimum of 2.0 pounds per linear inch (PLI). Test patches should be applied with rates listed below.
2. Power-wash substrate to remove contaminants that could negatively affect adhesion. Allow roof to completely dry.
3. Prime per chart below.
4. Treat all roof penetrations, drains, curbs, and scuppers. (Refer to Substrate Preparation section for requirements)
5. All loose seams must be 3-coursed. All other seams must be treated with flashing grade only, no fabric required. (Refer to Seam Treatment Guide for requirements)
6. Apply coating per the chart below:

CLEAN / PRIME

	Product	Rate (Gal/Sq)
Cleaner	Cleaning Concentrate (diluted)	0.5 - 0.7
Primer	Multi-Purpose Primer	0.33

SEAMS & DETAILS

Treatment Type	Product	Total (Gal/Sq)	Total (linear ft/gal)+	DFT* (mils)
3-Coursed Rates	Silicone Mastic and Fabric	2.50	75	45
Flashing Grade Only Rates	Silicone Mastic	4.00	50	60

Note: For other product options, please refer to our Seam Treatment Guide.
+Flashing rates are based on a 6" (152 mm) width.

AGED PVC

Coverage Term	Coating			Total		Warranties/Guarantees Available	
	1st Coat (Gal/Sq)	2nd Coat (Gal/Sq)	3rd Coat (Gal/Sq)	Gal/Sq	DFT* (mils)	Emerald Pledge™	Diamond Pledge™
10 Year	1.00	1.00		2.00	23	Yes	Yes
15 Year	1.25	1.50		2.75	31	Yes	Yes
20 Year	1.00	1.50	1.00	3.50	40	Yes	Yes

** Dry Film Thickness (DFT) is rounded to nearest mil, and is theoretical. Actual DFT will vary dependent on substrate profile, application technique and waste factor.*
Note: DFT for 3-coursed rates includes 6 mils for the fabric.

UNISIL QUICK SPEC

EPDM (UN-4)

NOTE: The following "Quick Spec" is an abbreviated specification and is not meant to replace the detailed specification. Complete 3-part CSI System Specifications are available at www.gaf.com.

METHOD REQUIREMENTS

Required:

- ❍ Moisture survey required
- ❍ Remove and replace any wet areas
- ❍ Repair membrane with like materials
- ❍ Roof must be clean, dry and tight
- ❍ Apply at 40°F (4°C) and rising with no rain, dew, fog or freezing temperatures in forecast for 8 hours
- ❍ Adhesion test required
- ❍ Power washing required

Recommendations:

- Refer to Technical Data Sheet for product specific application and surface temperature restrictions.

Installation Overview:

1. Before coating is applied, an adhesion test is required to ensure an adhesion minimum of 2.0 pounds per linear inch (PLI). Test patches should be applied with rates listed below.
2. Power-wash substrate to remove contaminants that could negatively affect adhesion. Allow roof to completely dry.
3. Prime per chart below.
4. Treat all roof penetrations, drains, curbs, and scuppers. (Refer to Substrate Preparation section for requirements)
5. All loose seams must be 3-coursed. All other seams must be treated with flashing grade only, no fabric required. (Refer to Seam Treatment Guide for requirements)
6. Apply coating per the chart below:

CLEAN / PRIME

	Product	Rate (Gal/Sq)
Cleaner[3]	Cleaning Concentrate (diluted)	0.5 - 0.7
Primer	EPDM Activator	0.20

[3]Cleaner is only required for heavy dirt build up.

SEAMS & DETAILS

Treatment Type	Product	Total (Gal/Sq)	Total (linear ft/gal)[+]	DFT* (mils)
3-Coursed Rates	Silicone Mastic and Fabric	2.50	75	45
Flashing Grade Only Rates	Silicone Mastic	4.00	50	60

Note: For other product options, please refer to our Seam Treatment Guide.
[+]Flashing rates are based on a 6" (152 mm) width.

EPDM

Coverage Term	Coating			Total		Warranties/Guarantees Available	
	1st Coat (Gal/Sq)	2nd Coat (Gal/Sq)	3rd Coat (Gal/Sq)	Gal/Sq	DFT* (mils)	Emerald Pledge™	Diamond Pledge™
10 Year	1.00	1.00		2.00	23	Yes	Yes
15 Year	1.25	1.50		2.75	31	Yes	Yes
20 Year	1.00	1.50	1.00	3.50	40	Yes	Yes

** Dry Film Thickness (DFT) is rounded to nearest mil, and is theoretical. Actual DFT will vary dependent on substrate profile, application technique and waste factor.*
Note: DFT for 3-coursed rates includes 6 mils for the fabric.

UNISIL QUICK SPEC

SMOOTH ASPHALTIC (UN-5)

NOTE: The following "Quick Spec" is an abbreviated specification and is not meant to replace the detailed specification. Complete 3-part CSI System Specifications are available at www.gaf.com.

METHOD REQUIREMENTS

Required:

- ❍ Moisture survey required
- ❍ Remove and replace any wet areas
- ❍ Repair membrane with like materials
- ❍ Roof must be clean, dry and tight
- ❍ Apply at 40°F (4°C) and rising with no rain, dew, fog or freezing temperatures in forecast for 8 hours
- ❍ Adhesion test required
- ❍ Power washing required
- ❍ New membranes should be aged at least 30 days; 90 days ideal.

Restrictions:

Do not apply over gravel surfaced substrates.

Recommendations:

- Refer to Technical Data Sheet for product specific application and surface temperature restrictions.

Installation Overview:

1. Before coating is applied, an adhesion test is required to ensure an adhesion minimum of 2.0 pounds per linear inch (PLI). Test patches should be applied with rates listed below.
2. Power-wash substrate to remove contaminants that could negatively affect adhesion. Allow roof to completely dry.
3. Prime per chart below.
4. All loose seams must be 3-coursed. All other seams must be treated with flashing grade only, no fabric required. (Refer to Substrate Preparation section for requirements)
5. Treat "alligatored" areas, surface cracks, roof penetrations, drains, curbs and scuppers. (Refer to Substrate Preparation section for requirements)
6. Apply coating per the chart below:

CLEAN / PRIME

	Product	Rate (Gal/Sq)
Cleaner	Cleaning Concentrate (diluted)	0.5 - 0.7
Primer	Bleed Block Primer	1.00

SEAMS & DETAILS

Treatment Type	Product	Total (Gal/Sq)	Total (linear ft/gal)+	DFT* (mils)
3-Coursed Rates	Silicone Mastic and Fabric	2.50	75	45
Flashing Grade Only Rates	Silicone Mastic	4.00	50	60

Note: For other product options, please refer to our Seam Treatment Guide.
+Flashing rates are based on a 6" (152 mm) width.

SMOOTH ASPHALTIC

Coverage Term	Coating			Total		Warranties/Guarantees Available	
	1st Coat (Gal/Sq)	2nd Coat (Gal/Sq)	3rd Coat (Gal/Sq)	Gal/Sq	DFT* (mils)	Emerald Pledge™	Diamond Pledge™
10 Year	1.50	1.00		2.50	28	Yes	Yes
15 Year	1.25	1.00	1.00	3.25	37	Yes	Yes
20 Year	1.50	1.50	1.00	4.00	46	Yes	Yes

** Dry Film Thickness (DFT) is rounded to nearest mil, and is theoretical. Actual DFT will vary dependent on substrate profile, application technique and waste factor.*
Note: DFT for 3-coursed rates includes 6 mils for the fabric.

UNISIL QUICK SPEC

GRANULATED ASPHALTIC (UN-6)

NOTE: The following "Quick Spec" is an abbreviated specification and is not meant to replace the detailed specification. Complete 3-part CSI System Specifications are available at www.gaf.com.

METHOD REQUIREMENTS

Required:

- ❍ Moisture survey required
- ❍ Remove and replace any wet areas
- ❍ Repair membrane with like materials
- ❍ Roof must be clean, dry and tight
- ❍ Apply at 40°F (4°C) and rising with no rain, dew, fog or freezing temperatures in forecast for 8 hours
- ❍ Power washing required
- ❍ New membranes should be aged at least 30 days; 90 days is ideal.

Restrictions:

Do not apply over gravel surfaced substrates.

Recommendations:

- Refer to Technical Data Sheet for product specific application and surface temperature restrictions.

Installation Overview:

1. Power-wash substrate to remove contaminants that could negatively affect adhesion. Allow roof to completely dry.
2. Prime per chart below.
3. All loose seams must be 3-coursed. All other seams must be treated with flashing grade only, no fabric required. (Refer to Substrate Preparation section for requirements)
4. Treat "alligatored" areas, surface cracks, roof penetrations, drains, curbs and scuppers. (Refer to Substrate Preparation section for requirements)
5. Apply coating per the chart below:

SURFACE PREP

	Product	Rate (Gal/Sq)
Cleaner	Cleaning Concentrate (diluted)	0.5 - 0.7
Primer	Bleed Block Primer	1.50

SEAMS & DETAILS

Treatment Type	Product	Total (Gal/Sq)	Total (linear ft/gal)+	DFT* (mils)
3-Coursed Rates	Silicone Mastic and Fabric	2.50	75	45
Flashing Grade Only Rates	Silicone Mastic	4.00	50	60

Note: For other product options, please refer to our Seam Treatment Guide.
+Flashing rates are based on a 6" (152 mm) width.

GRANULATED ASPHALTIC

Coverage Term	Coating			Total		Warranties/Guarantees Available	
	1st Coat (Gal/Sq)	2nd Coat (Gal/Sq)	3rd Coat (Gal/Sq)	Gal/Sq	DFT* (mils)	Emerald Pledge™	Diamond Pledge™
10 Year	1.50	1.00		2.50	28	Yes	Yes
15 Year	1.25	1.00	1.00	3.25	37	Yes	Yes
20 Year	1.50	1.50	1.00	4.00	46	Yes	Yes

** Dry Film Thickness (DFT) is rounded to nearest mil, and is theoretical. Actual DFT will vary dependent on substrate profile, application technique and waste factor.*
Note: DFT for 3-coursed rates includes 6 mils for the fabric.

UNISIL QUICK SPEC

STRUCTURAL CONCRETE (UN-7)

NOTE: The following "Quick Spec" is an abbreviated specification and is not meant to replace the detailed specification. Complete 3-part CSI System Specifications are available at www.gaf.com.

METHOD REQUIREMENTS

Required:

- ❍ Moisture survey required (must contain less than 8% moisture)
- ❍ Repair deteriorated sections with like materials. Allow repairs to cure properly
- ❍ Roof must be clean, dry and tight
- ❍ Apply at 40°F (4°C) and rising with no rain, dew, fog or freezing temperatures in forecast for 8 hours
- ❍ Adhesion test required
- ❍ Power washing required
- ❍ Concrete must be fully cured

Recommendations:

- Refer to Technical Data Sheet for product specific application and surface temperature restrictions.

Installation Overview:

1. Before coating is applied, an adhesion test is required to ensure an adhesion minimum of 2.0 pounds per linear inch (PLI). Test patches should be applied with rates listed below.
2. Power-wash substrate to remove contaminants that could negatively affect adhesion. Allow roof to completely dry.
3. Prime per chart below.
4. Treat all roof penetrations, drains, curbs, and scuppers. (Refer to Substrate Preparation section for requirements)
5. Treat structural joints with backer rod and compatible sealant prior to seam treatment. (Refer to Seam Treatment Guide for requirements)
6. Control joints in excess of 1/16" (1.6 mm) shall be caulked with compatible caulk.
7. Apply coating per the chart below:

CLEAN / PRIME

	Product	Rate (Gal/Sq)
Cleaner	Cleaning Concentrate (diluted)	0.5 - 0.7
Primer	Multi-Purpose Primer	0.50 - 0.67

SEAMS & DETAILS

Treatment Type	Product	Total (Gal/Sq)	Total (linear ft/gal)+	DFT* (mils)
3-Coursed Rates	Silicone Mastic and Fabric	2.50	75	45
Flashing Grade Only Rates	Silicone Mastic	4.00	50	60

Note: For other product options, please refer to our Seam Treatment Guide.
+Flashing rates are based on a 6" (152 mm) width.

STRUCTURAL CONCRETE

Coverage Term	Coating			Total		Warranties/Guarantees Available	
	1st Coat (Gal/Sq)	2nd Coat (Gal/Sq)	3rd Coat (Gal/Sq)	Gal/Sq	DFT* (mils)	Emerald Pledge™	Diamond Pledge™
10 Year	1.50	1.00		2.50	28	Yes	Yes
15 Year	1.25	1.00	1.00	3.25	37	Yes	Yes
20 Year	1.50	1.50	1.00	4.00	46	Yes	Yes

** Dry Film Thickness (DFT) is rounded to nearest mil, and is theoretical. Actual DFT will vary dependent on substrate profile, application technique and waste factor.*
Note: DFT for 3-coursed rates includes 6 mils for the fabric.

UNISIL QUICK SPEC

CORRUGATED STRUCTURAL TRANSITE PANELS (UN-8)

NOTE: The following "Quick Spec" is an abbreviated specification and is not meant to replace the detailed specification. Complete 3-part CSI System Specifications are available at www.gaf.com.

METHOD REQUIREMENTS

Required:

- ❍ Moisture survey required
- ❍ Remove and replace any wet areas
- ❍ Repair membrane with like materials
- ❍ Roof must be clean, dry and tight
- ❍ Apply at 40°F (4°C) and rising with no rain, dew, fog or freezing temperatures in forecast for 8 hours
- ❍ Adhesion test required
- ❍ Power washing required

Recommendations:

- Refer to Technical Data Sheet for product specific application and surface temperature restrictions.

Installation Overview:

1. Before coating is applied, an adhesion test is required to ensure an adhesion minimum of 2.0 pounds per linear inch (PLI). Test patches should be applied with rates listed below.
2. Power-wash substrate to remove contaminants that could negatively affect adhesion. Allow roof to completely dry.
3. Tighten/replace existing fasteners. Encapsulate with appropriate flashing material.
4. Prime per chart below.
5. Treat all roof penetrations, drains, curbs, and scuppers. (Refer to Substrate Preparation section for requirements)
6. Treat transite gaps in excess of 1/16" with compatible caulk prior to seam treatment. (Refer to Substrate Preparation Seam Treatment Guide for requirements)
7. Apply coating per the chart below:

CLEAN / PRIME

	Product	Rate (Gal/Sq)
Cleaner	Cleaning Concentrate (diluted)	0.5 - 0.7
Primer	Multi-Purpose Primer	0.50 - 0.67

SEAMS & DETAILS

Treatment Type	Product	Total (Gal/Sq)	Total (linear ft/gal)+	DFT* (mils)
3-Coursed Rates	Silicone Mastic and Fabric	2.50	75	45
Flashing Grade Only Rates	Silicone Mastic	4.00	50	60

Note: For other product options, please refer to our Seam Treatment Guide.
+Flashing rates are based on a 6" (152 mm) width.

CORRUGATED STRUCTURAL TRANSITE PANELS

Coverage Term	Coating			Total		Warranties/Guarantees Available	
	1st Coat (Gal/Sq)	2nd Coat (Gal/Sq)	3rd Coat (Gal/Sq)	Gal/Sq	DFT* (mils)	Emerald Pledge™	Diamond Pledge™
10 Year	1.50	1.00		2.50	28	Yes	Yes
15 Year	1.25	1.00	1.00	3.25	37	Yes	Yes
20 Year	1.50	1.50	1.00	4.00	46	Yes	Yes

** Dry Film Thickness (DFT) is rounded to nearest mil, and is theoretical. Actual DFT will vary dependent on substrate profile, application technique and waste factor. Note: DFT for 3-coursed rates includes 6 mils for the fabric.*

***Important note:** Corrugated structural transite panels may contain asbestos. Follow all applicable local, state and federal regulations concerning asbestos. Under no circumstances does GAF have any liability for any damages, costs or expenses arising out of or associated with the pre-existing presence of asbestos containing materials on the roof to which the new GAF roofing materials are being applied.*

UNISIL QUICK SPEC

SPRAY POLYURETHANE FOAM (UN-9)

NOTE: The following "Quick Spec" is an abbreviated specification and is not meant to replace the detailed specification. Complete 3-part CSI System Specifications are available at www.gaf.com.

METHOD REQUIREMENTS

Required:

- ❍ Moisture survey required
- ❍ Remove and replace any wet areas
- ❍ Repair substrate with like materials
- ❍ Roof must be clean, dry and tight
- ❍ Apply at 40°F (4°C) and rising with no rain, dew, fog or freezing temperatures in forecast for 8 hours

Installation Overview:

1. Treat all roof penetrations, drains, curbs, and scuppers. (Refer to Substrate Preparation section for requirements)
2. Apply coating per the chart below:

Recommendations:

- For additional information regarding SPF, contact the specific SPF manufacturer and/or refer to sprayfoam.org.
- Refer to Technical Data Sheet for product specific application and surface temperature restrictions.
- Optional: clean roofing granules may be embedded in final coat.

SEAMS & DETAILS

Treatment Type	Product	Total (Gal/Sq)	Total (linear ft/gal)+	DFT* (mils)
3-Coursed Rates	Silicone Mastic and Fabric	2.50	75	45
Flashing Grade Only Rates	Silicone Mastic	4.00	50	60

Note: For other product options, please refer to our Seam Treatment Guide.
+Flashing rates are based on a 6" (152 mm) width.

SPRAY POLYURETHANE FOAM

Coverage Term	Coating		Total		Warranties/Guarantees Available	
	1st Coat (Gal/Sq)	2nd Coat (Gal/Sq)	Gal/Sq	DFT* (mils)	Emerald Pledge™	Diamond Pledge™
10 Year	1.00	0.75	1.75	20	Yes	Yes
15 Year	1.25	1.00	2.25	25	Yes	Yes
20 Year	1.50	1.25	2.75	31	Yes	Yes

** Dry Film Thickness (DFT) is rounded to nearest mil, and is theoretical. Actual DFT will vary dependent on substrate profile, application technique and waste factor.*
Note: DFT for 3-coursed rates includes 6 mils for the fabric.

UNISIL QUICK SPEC

AGED TPO (UN-10)

NOTE: The following "Quick Spec" is an abbreviated specification and is not meant to replace the detailed specification. Complete 3-part CSI System Specifications are available at www.gaf.com.

METHOD REQUIREMENTS

Required:

- ❍ Moisture survey required
- ❍ Remove and replace any wet areas
- ❍ Repair membrane with like materials
- ❍ Roof must be clean, dry and tight
- ❍ Apply at 40°F (4°C) and rising with no rain, dew, fog or freezing temperatures in forecast for 8 hours
- ❍ Adhesion test required[2]
- ❍ Power washing required
- ❍ New membranes should be aged at least 90+ days.

Recommendations:

- Refer to Technical Data Sheet for product specific application and surface temperature restrictions.

Installation Overview:

1. Before coating is applied, an adhesion test is required to ensure an adhesion minimum of 2.0 pounds per linear inch (PLI). Test patches should be applied with rates listed below[2].
2. Power-wash substrate to remove contaminants that could negatively affect adhesion. Allow roof to completely dry.
3. Treat all roof penetrations, drains, curbs, and scuppers. (Refer to Substrate Preparation section for requirements)
4. All loose seams must be 3-coursed. All other seams must be treated with flashing grade only, no fabric required. (Refer to Seam Treatment Guide for requirements)
5. Apply coating per the chart below:

CLEAN

	Product	Rate (Gal/Sq)
Cleaner	Cleaning Concentrate (diluted)	0.5 - 0.7

SEAMS & DETAILS

Treatment Type	Product	Total (Gal/Sq)	Total (linear ft/gal)+	DFT* (mils)
3-Coursed Rates	Silicone Mastic and Fabric	2.50	75	45
Flashing Grade Only Rates	Silicone Mastic	4.00	50	60

Note: For other product options, please refer to our Seam Treatment Guide.
+Flashing rates are based on a 6" (152 mm) width.

AGED TPO

Coverage Term	Coating			Total		Warranties/Guarantees Available	
	1st Coat (Gal/Sq)	2nd Coat (Gal/Sq)	3rd Coat (Gal/Sq)	Gal/Sq	DFT* (mils)	Emerald Pledge™	Diamond Pledge™
10 Year	1.00	1.00		2.00	23	Yes	Yes
15 Year	1.25	1.50		2.75	31	Yes	Yes
20 Year	1.00	1.50	1.00	3.50	40	Yes	Yes

** Dry Film Thickness (DFT) is rounded to nearest mil, and is theoretical. Actual DFT will vary dependent on substrate profile, application technique and waste factor.*
Note: DFT for 3-coursed rates includes 6 mils for the fabric.
[2] For new TPO or when 2 PLI is not met, contact GAF Design Services.

HIGH SOLIDS SILICONE QUICK SPEC DIRECTORY

Spec Number	Substrate Specification	Page #
UH-1	Metal	67
UH-2	Aged PVC	68
UH-4	EPDM	69
UH-5	Smooth Asphaltic	70
UH-6	Granulated Asphaltic	71
UH-7	Structural Concrete	72
UH-8	Corrugated Structural Transite Panels	73
UH-9	Spray Polyurethane Foam (SPF)	74
UH-10	Aged TPO	75

Quick Specs are abbreviated specifications and are not meant to replace detailed specifications. Complete 3-part CSI System Specifications are available at www.gaf.com.

HIGH SOLIDS SILICONE QUICK SPEC

METAL (UH-1)

NOTE: The following "Quick Spec" is an abbreviated specification and is not meant to replace the detailed specification. Complete 3-part CSI System Specifications are available at www.gaf.com.

METHOD REQUIREMENTS

Required:

- ❍ Roof must be clean, dry and tight
- ❍ Apply at 40°F (4°C) and rising with no rain, dew, fog or freezing temperatures in forecast for 8 hours
- ❍ Adhesion test required
- ❍ Power washing required
- ❍ Rust should be removed with a wire brush prior to coating, and structural repairs should be made with like-materials as needed.

Recommendations:

- Refer to Technical Data Sheet for product specific application and surface temperature restrictions.

Installation Overview:

1. Before coating is applied, an adhesion test is required to ensure an adhesion minimum of 2.0 pounds per linear inch (PLI). Test patches should be applied with rates listed below.
2. Tighten/replace existing fasteners. Encapsulate with appropriate flashing material.
3. Power-wash substrate to remove contaminants that could negatively affect adhesion. Allow roof to completely dry.
4. Install crickets to divert water and complete other necessary sheet metal repairs.
5. Treat all roof penetrations, drains, curbs, and scuppers. (Refer to Substrate Preparation section for requirements)
6. If horizontal seams have gaps larger then 1/8"when pressure is applied at the lower panel add additional stitch screws and treat with flashing grade only.
7. Overlap seams must be treated with flashing grade. All other seams may forgo treatment **IF** the seal/tape is intact on the seam or if they are double locked. (Refer to Seam Treatment Guide for requirements)
8. Apply coating per the chart below:

CLEAN

	Product	Rate (Gal/Sq)
Cleaner	Cleaning Concentrate (diluted)	0.5 - 0.7

SEAMS & DETAILS

Treatment Type	Product	Total (Gal/Sq)	Total (linear ft/gal)+	DFT* (mils)
3-Coursed Rates	Silicone Mastic and Fabric	2.50	75	45
Flashing Grade Only Rates	Silicone Mastic	4.00	50	60

Note: For other product options, please refer to our Seam Treatment Guide.
+Flashing rates are based on a 6" (152 mm) width.

METAL

Coverage Term	Total		Warranties/Guarantees Available	
	Gal/Sq‡	DFT* (mils)	Emerald Pledge™	Diamond Pledge™
10 Year	1.50	23	Yes	Yes
15 Year	2.00	31	Yes	Yes
20 Year	2.50	39	Yes	Yes

** Dry Film Thickness (DFT) is rounded to nearest mil, and is theoretical. Actual DFT will vary dependent on substrate profile, application technique and waste factor.*
Note: DFT for 3-coursed rates includes 6 mils for the fabric.
‡Coating may be applied in a single pass, as long as the substrate and slope conditions allow (no slumping), and the required DFT (mils) are met.

HIGH SOLIDS SILIONE QUICK SPEC

AGED PVC (UH-2)

NOTE: The following "Quick Spec" is an abbreviated specification and is not meant to replace the detailed specification. Complete 3-part CSI System Specifications are available at www.gaf.com.

METHOD REQUIREMENTS

Required:

- ❍ Moisture survey required
- ❍ Remove and replace any wet areas
- ❍ Repair membrane with like materials
- ❍ Roof must be clean, dry and tight
- ❍ Apply at 40°F (4°C) and rising with no rain, dew, fog or freezing temperatures in forecast for 8 hours
- ❍ Adhesion test required
- ❍ Power washing required

Recommendations:

- Refer to Technical Data Sheet for product specific application and surface temperature restrictions.

Installation Overview:

1. Before coating is applied, an adhesion test is required to ensure an adhesion minimum of 2.0 pounds per linear inch (PLI). Test patches should be applied with rates listed below[2].
2. Power-wash substrate to remove contaminants that could negatively affect adhesion. Allow roof to completely dry.
3. Prime per chart below.
4. Treat all roof penetrations, drains, curbs, and scuppers. (Refer to Substrate Preparation section for requirements)
5. All loose seams must be 3-coursed. All other seams must be treated with flashing grade only, no fabric required. (Refer to Seam Treatment Guide for requirements)
6. Apply coating per the chart below:

CLEAN / PRIME

	Product	Rate (Gal/Sq)
Cleaner	Cleaning Concentrate (diluted)	0.5 - 0.7
Primer	Multi-Purpose Primer	0.33

SEAMS & DETAILS

Treatment Type	Product	Total (Gal/Sq)	Total (linear ft/gal)+	DFT* (mils)
3-Coursed Rates	Silicone Mastic and Fabric	2.50	75	45
Flashing Grade Only Rates	Silicone Mastic	4.00	50	60

Note: For other product options, please refer to our Seam Treatment Guide.
+Flashing rates are based on a 6" (152 mm) width.

Aged PVC

Coverage Term	Total		Warranties/Guarantees Available	
	Gal/Sq‡	DFT*	Emerald Pledge™	Diamond Pledge™
10 Year	1.50	23	Yes	Yes
15 Year	2.00	31	Yes	Yes
20 Year	2.50	39	Yes	Yes

** Dry Film Thickness (DFT) is rounded to nearest mil, and is theoretical. Actual DFT will vary dependent on substrate profile, application technique and waste factor.*
Note: DFT for 3-coursed rates includes 6 mils for the fabric.
[2] When 2 PLI is not met, contact GAF Design Services.
‡ Coating may be applied in a single pass, as long as the substrate and slope conditions allow (no slumping), and the required DFT (mils) are met.

HIGH SOLIDS SILICONE QUICK SPEC

EPDM (UH-4)

NOTE: The following "Quick Spec" is an abbreviated specification and is not meant to replace the detailed specification. Complete 3-part CSI System Specifications are available at www.gaf.com.

METHOD REQUIREMENTS

Required:

- ❍ Moisture survey required
- ❍ Remove and replace any wet areas
- ❍ Repair membrane with like materials
- ❍ Roof must be clean, dry and tight
- ❍ Apply at 40°F (4°C) and rising with no rain, dew, fog or freezing temperatures in forecast for 8 hours
- ❍ Adhesion test required
- ❍ Power washing required

Recommendations:

- Refer to Technical Data Sheet for product specific application and surface temperature restrictions.

Installation Overview:

1. Before coating is applied, an adhesion test is required to ensure an adhesion minimum of 2.0 pounds per linear inch (PLI). Test patches should be applied with rates listed below.
2. Power-wash substrate to remove contaminants that could negatively affect adhesion. Allow roof to completely dry.
3. Prime per chart below.
4. Treat all roof penetrations, drains, curbs, and scuppers. (Refer to Substrate Preparation section for requirements)
5. All loose seams must be 3-coursed. All other seams must be treated with flashing grade only, no fabric required. (Refer to Seam Treatment Guide for requirements)
6. Apply coating per the chart below:

CLEAN / PRIME

	Product	Rate (Gal/Sq)
Cleaner[3]	Cleaning Concentrate (diluted)	0.5 - 0.7
Primer[4]	EPDM Activator	0.20

[3]Cleaner is only required for heavy dirt build up.
[4]If required for adhesion, apply GAF Multi-Purpose Primer at the rate of 0.33 gal/sq after use of EPDM Activator.

SEAMS & DETAILS

Treatment Type	Product	Total (Gal/Sq)	Total (linear ft/gal)+	DFT* (mils)
3-Coursed Rates	Silicone Mastic and Fabric	2.50	75	45
Flashing Grade Only Rates	Silicone Mastic	4.00	50	60

Note: For other product options, please refer to our Seam Treatment Guide.
+Flashing rates are based on a 6" (152 mm) width.

EPDM

Coverage Term	Total		Warranties/Guarantees Available	
	Gal/Sq‡	DFT* (mils)	Emerald Pledge™	Diamond Pledge™
10 Year	1.50	23	Yes	Yes
15 Year	2.00	31	Yes	Yes
20 Year	2.50	39	Yes	Yes

** Dry Film Thickness (DFT) is rounded to nearest mil, and is theoretical. Actual DFT will vary dependent on substrate profile, application technique and waste factor.*
Note: DFT for 3-coursed rates includes 6 mils for the fabric.
‡ Coating may be applied in a single pass, as long as the substrate and slope conditions allow (no slumping), and the required DFT (mils) are met.

HIGH SOLIDS SILICONE QUICK SPEC

SMOOTH ASPHALTIC (UH-5)

NOTE: The following "Quick Spec" is an abbreviated specification and is not meant to replace the detailed specification. Complete 3-part CSI System Specifications are available at www.gaf.com.

METHOD REQUIREMENTS

Required:

- ❍ Moisture survey required
- ❍ Remove and replace any wet areas
- ❍ Repair membrane with like materials
- ❍ Roof must be clean, dry and tight
- ❍ Apply at 40°F (4°C) and rising with no rain, dew, fog or freezing temperatures in forecast for 8 hours
- ❍ Adhesion test required
- ❍ Power washing required
- ❍ New membranes should be aged at least 30 days; 90 + days is ideal.

Restrictions:

Do not apply over gravel–surfaced substrates.

Recommendations:

- Refer to Technical Data Sheet for product specific application and surface temperature restrictions.

Installation Overview:

1. Before coating is applied, an adhesion test is required to ensure an adhesion minimum of 2.0 pounds per linear inch (PLI). Test patches should be applied with rates listed below.
2. Power-wash substrate to remove contaminants that could negatively affect adhesion. Allow roof to completely dry.
3. Prime per chart below.
4. Treat "alligatored" areas, surface cracks, roof penetrations, drains, curbs and scuppers. (Refer to Substrate Preparation section for requirements)
5. All loose seams must be 3-coursed. All other seams must be treated with flashing grade/ High Solids Silicone only, no fabric required. (Refer to Seam Treatment Guide for requirements)
6. Apply coating per the chart below:

CLEAN / PRIME

	Product	Rate (Gal/Sq)
Cleaner	Cleaning Concentrate (diluted)	0.5 - 0.7
Primer	Bleed Block Primer	1.00

SEAMS & DETAILS

Treatment Type	Product	Total (Gal/Sq)	Total (linear ft/ gal)+	DFT* (mils)
3-Coursed Rates	Silicone Mastic and Fabric	2.50	75	44
Flashing Grade Only Rates	Silicone Mastic	4.00	50	60
Coating Only Rates	High Solids Silicone	1.25	200	19

Note: For other product options, please refer to our Seam Treatment Guide.
+Flashing rates are based on a 6" (152 mm) width.

SMOOTH ASPHALTIC

Coverage Term	Total		Warranties/Guarantees Available	
	Gal/Sq‡	DFT* (mils)	Emerald Pledge™	Diamond Pledge™
10 Year	1.50	23	Yes	Yes
15 Year	2.00	31	Yes	Yes
20 Year	2.50	39	Yes	Yes

** Dry Film Thickness (DFT) is rounded to nearest mil, and is theoretical. Actual DFT will vary dependent on substrate profile, application technique and waste factor.*
Note: DFT for 3-coursed rates includes 6 mils for the fabric.
‡Coating may be applied in a single pass, as long as the substrate and slope conditions allow (no slumping), and the required DFT (mils) are met.

HIGH SOLIDS SILICONE QUICK SPEC

GRANULATED ASPHALTIC (UH-6)

NOTE: The following "Quick Spec" is an abbreviated specification and is not meant to replace the detailed specification. Complete 3-part CSI System Specifications are available at www.gaf.com.

METHOD REQUIREMENTS

Required:

- ❍ Moisture survey required
- ❍ Remove and replace any wet areas
- ❍ Repair membrane with like materials
- ❍ Roof must be clean, dry and tight
- ❍ Apply at 40°F (4°C) and rising with no rain, dew, fog or freezing temperatures in forecast for 8 hours
- ❍ Power washing required
- ❍ New membranes should be aged at least 30 days; 90 + days is ideal.

Restrictions:

Do not apply over gravel–surfaced substrates.

Recommendations:

- Refer to Technical Data Sheet for product specific application and surface temperature restrictions.

Installation Overview:

1. Power-wash substrate to remove contaminants that could negatively affect adhesion. Allow roof to completely dry.
2. Prime per chart below.
3. Treat "alligatored" areas, surface cracks, roof penetrations, drains, curbs and scuppers. (Refer to Substrate Preparation section for requirements)
4. All loose seams must be 3-coursed. All other seams must be treated with flashing grade/ High Solids Silicone only, no fabric required. (Refer to Seam Treatment Guide for requirements)
5. Apply coating per the chart below:

CLEAN / PRIME

	Product	Rate (Gal/Sq)
Cleaner	Cleaning Concentrate (diluted)	0.5 - 0.7
Primer	Bleed Block Primer	1.50

SEAMS & DETAILS

Treatment Type	Product	Total (Gal/Sq)	Total (linear ft/ gal)+	DFT* (mils)
3-Coursed Rates	Silicone Mastic and Fabric	2.50	75	45
Flashing Grade Only Rates	Silicone Mastic	4.00	50	60
Coating Only Rates	High Solids Silicone	1.25	200	19

Note: For other product options, please refer to our Seam Treatment Guide.
+Flashing rates are based on a 6" (152 mm) width.

GRANULATED ASPHALTIC

Coverage Term	Total		Warranties/Guarantees Available	
	Gal/Sq‡	DFT* (mils)	Emerald Pledge™	Diamond Pledge™
10 Year	1.50	23	Yes	Yes
15 Year	2.00	31	Yes	Yes
20 Year	2.50	39	Yes	Yes

** Dry Film Thickness (DFT) is rounded to nearest mil, and is theoretical. Actual DFT will vary dependent on substrate profile, application technique and waste factor.*
Note: DFT for 3-coursed rates includes 6 mils for the fabric.

‡Coating may be applied in a single pass, as long as the substrate and slope conditions allow (no slumping), and the required DFT (mils) are met.

HIGH SOLIDS SILICONE QUICK SPEC

STRUCTURAL CONCRETE (UH-7)

NOTE: The following "Quick Spec" is an abbreviated specification and is not meant to replace the detailed specification. Complete 3-part CSI System Specifications are available at www.gaf.com.

METHOD REQUIREMENTS

Required:

- ❍ Moisture survey required (must contain less than 8% moisture)
- ❍ Repair deteriorated sections with like materials. Allow repairs to cure properly
- ❍ Roof must be clean, dry and tight
- ❍ Apply at 40°F (4°C) and rising with no rain, dew, fog or freezing temperatures in forecast for 8 hours
- ❍ Adhesion test required
- ❍ Concrete must be fully cured

Recommendations:

- Refer to Technical Data Sheet for product specific application and surface temperature restrictions.

Installation Overview:

1. Before coating is applied, an adhesion test is required to ensure an adhesion minimum of 2.0 pounds per linear inch (PLI). Test patches should be applied with rates listed below.
2. Power-wash substrate to remove contaminants that could negatively affect adhesion. Allow roof to completely dry.
3. Prime per chart below.
4. Treat all roof penetrations, drains, curbs, and scuppers. (Refer to Substrate Preparation section for requirements)
5. Treat structural joints with backer rod and compatible sealant prior to seam treatment. (Refer to Seam Treatment Guide for requirements)
6. Control Joints in excess of 1/16" (1.6 mm) shall be caulked with compatible caulk.
7. Apply coating per the chart below:

CLEAN / PRIME

	Product	Rate (Gal/Sq)
Cleaner	Cleaning Concentrate (diluted)	0.5 - 0.7
Primer	Multi-Purpose Primer	0.50 - 0.67

SEAMS & DETAILS

Treatment Type	Product	Total (Gal/Sq)	Total (linear ft/gal)+	DFT* (mils)
3-Coursed Rates	Silicone Mastic and Fabric	2.50	75	45
Flashing Grade Only Rates	Silicone Mastic	4.00	50	60

Note: For other product options, please refer to our Seam Treatment Guide.
+Flashing rates are based on a 6" (152 mm) width.

STRUCTURAL CONCRETE

Coverage Term	Total		Warranties/Guarantees Available	
	Gal/Sq‡	DFT* (mils)	Emerald Pledge™	Diamond Pledge™
10 Year	1.50	23	Yes	Yes
15 Year	2.00	31	Yes	Yes
20 Year	2.50	39	Yes	Yes

** Dry Film Thickness (DFT) is rounded to nearest mil, and is theoretical. Actual DFT will vary dependent on substrate profile, application technique and waste factor.*
Note: DFT for 3-coursed rates includes 6 mils for the fabric.

‡Coating may be applied in a single pass, as long as the substrate and slope conditions allow (no slumping), and the required DFT (mils) are met.

HIGH SOLIDS SILICONE QUICK SPEC

CORRUGATED STRUCTURAL TRANSITE PANELS (UH-8)

NOTE: The following "Quick Spec" is an abbreviated specification and is not meant to replace the detailed specification. Complete 3-part CSI System Specifications are available at www.gaf.com.

METHOD REQUIREMENTS

Required:

- ❍ Moisture survey required
- ❍ Remove and replace any wet areas
- ❍ Repair membrane with like materials
- ❍ Roof must be clean, dry and tight
- ❍ Apply at 40°F (4°C) and rising with no rain, dew, fog or freezing temperatures in forecast for 8 hours
- ❍ Adhesion test required
- ❍ Power washing required

Recommendations:

- Refer to Technical Data Sheet for product specific application and surface temperature restrictions.

Installation Overview:

1. Before coating is applied, an adhesion test is required to ensure an adhesion minimum of 2.0 pounds per linear inch (PLI). Test patches should be applied with rates listed below.
2. Power-wash substrate to remove contaminants that could negatively affect adhesion. Allow roof to completely dry.
3. Tighten/replace existing fasteners. Encapsulate with appropriate flashing material.
4. Prime per chart below.
5. Treat all roof penetrations, drains, curbs, and scuppers. (Refer to Substrate Preparation section for requirements)
6. Treat transite gaps in excess of 1/16" with compatible caulk prior to seam treatment. (Refer to Substrate Preparation Seam Treatment Guide for requirements)
7. Apply coating per the chart below:

CLEAN / PRIME

	Product	Rate (Gal/Sq)
Cleaner	Cleaning Concentrate (diluted)	0.5 - 0.7
Primer	Multi-Purpose Primer	0.50 - 0.67

SEAMS & DETAILS

Treatment Type	Product	Total (Gal/Sq)	Total (linear ft/gal)+	DFT* (mils)
3-Coursed Rates	Silicone Mastic and Fabric	2.50	75	45
Flashing Grade Only Rates	Silicone Mastic	4.00	50	63

Note: For other product options, please refer to our Seam Treatment Guide.
+Flashing rates are based on a 6" (152 mm) width.

CORRUGATED STRUCTURAL TRANSITE PANELS

Coverage Term	Total		Warranties/Guarantees Available	
	Gal/Sq‡	DFT* (mils)	Emerald Pledge™	Diamond Pledge™
10 Year	1.50	23	Yes	Yes
15 Year	2.00	31	Yes	Yes
20 Year	2.50	39	Yes	Yes

** Dry Film Thickness (DFT) is rounded to nearest mil, and is theoretical. Actual DFT will vary dependent on substrate profile, application technique and waste factor. Note: DFT for 3-coursed rates includes 6 mils for the fabric.*

‡Coating may be applied in a single pass, as long as the substrate and slope conditions allow (no slumping), and the required DFT (mils) are met.

***Important note** Corrugated structural transite panels may contain asbestos. Follow all applicable local, state and federal regulations concerning asbestos. Under no circumstances does GAF have any liability for any damages, costs or expenses arising out of or associated with the pre-exsisting presence of asbestos containing materials or any other allgedly hazardous substances or materials on the roof to which the new GAF roofing materials are being applied.*

HIGH SOLIDS SILICONE QUICK SPEC

SPRAY POLYURETHANE FOAM (UH-9)

NOTE: The following "Quick Spec" is an abbreviated specification and is not meant to replace the detailed specification. Complete 3-part CSI System Specifications are available at www.gaf.com.

METHOD REQUIREMENTS

Required:

- ❍ Moisture survey required
- ❍ Remove and replace any wet areas
- ❍ Repair substrate with like materials
- ❍ Roof must be clean, dry and tight
- ❍ Apply at 40°F (4°C) and rising with no rain, dew, fog or freezing temperatures in forecast for 8 hours

Recommendations:

- For additional information regarding SPF, contact the specific SPF manufacturer and/or refer to sprayfoam.org.
- Refer to Technical Data Sheet for product specific application and surface temperature restrictions.
- Optional: clean roofing granules may be embedded in final coat.

Installation Overview:

1. Treat all roof penetrations, drains, curbs, and scuppers. (Refer to Substrate Preparation section for requirements)
2. Apply coating per the chart below:

SEAMS & DETAILS

Treatment Type	Product	Total (Gal/Sq)	Total (linear ft/gal)+	DFT* (mils)
3-Coursed Rates	Silicone Mastic and Fabric	2.50	75	45
Flashing Grade Only Rates	Silicone Mastic	4.00	50	60

Note: For other product options, please refer to our Seam Treatment Guide.
+Flashing rates are based on a 6" (152 mm) width.

SPRAY POLYURETHANE FOAM

Coverage Term	Total		Warranties/Guarantees Available	
	Gal/Sq‡	DFT* (mils)	Emerald Pledge™	Diamond Pledge™
10 Year	1.25	19	Yes	Yes
15 Year	1.75	27	Yes	Yes
20 Year	2.00	31	Yes	Yes

** Dry Film Thickness (DFT) is rounded to nearest mil, and is theoretical. Actual DFT will vary dependent on substrate profile, application technique and waste factor.*
Note: DFT for 3-coursed rates includes 6 mils for the fabric.

‡Coating may be applied in a single pass, as long as the substrate and slope conditions allow (no slumping), and the required DFT (mils) are met.

HIGH SOLIDS SILICONE QUICK SPEC

AGED TPO (UH-10)

NOTE: The following "Quick Spec" is an abbreviated specification and is not meant to replace the detailed specification. Complete 3-part CSI System Specifications are available at www.gaf.com.

METHOD REQUIREMENTS

Required:

- ❍ Moisture survey required
- ❍ Remove and replace any wet areas
- ❍ Repair membrane with like materials
- ❍ Roof must be clean, dry and tight
- ❍ Apply at 40°F (4°C) and rising with no rain, dew, fog or freezing temperatures in forecast for 8 hours
- ❍ Adhesion test required[2]
- ❍ Power washing required

Recommendations:

- Refer to Technical Data Sheet for product specific application and surface temperature restrictions.

Installation Overview:

1. Before coating is applied, an adhesion test is required to ensure an adhesion minimum of 2.0 pounds per linear inch (PLI). Test patches should be applied with rates listed below[2].
2. Power-wash substrate to remove contaminants that could negatively affect adhesion. Allow roof to completely dry.
3. Treat all roof penetrations, drains, curbs, and scuppers. (Refer to Substrate Preparation section for requirements)
4. All loose seams must be 3-coursed. All other seams must be treated with flashing grade only, no fabric required. (Refer to Seam Treatment Guide for requirements)
5. Apply coating per the chart below:

CLEAN

	Product	Rate (Gal/Sq)
Cleaner	Cleaning Concentrate (diluted)	0.5 - 0.7

SEAMS & DETAILS

Treatment Type	Product	Total (Gal/Sq)	Total (linear ft/gal)+	DFT* (mils)
3-Coursed Rates	Silicone Mastic and Fabric	2.50	75	45
Flashing Grade Only Rates	Silicone Mastic	4.00	50	60

Note: For other product options, please refer to our Seam Treatment Guide.
[2]Flashing rates are based on a 6" (152 mm) width.

AGED TPO

Coverage Term	Total		Warranties/Guarantees Available	
	Gal/Sq‡	DFT* (mils)	Emerald Pledge™	Diamond Pledge™
10 Year	1.50	23	Yes	Yes
15 Year	2.00	31	Yes	Yes
20 Year	2.50	39	Yes	Yes

** Dry Film Thickness (DFT) is rounded to nearest mil, and is theoretical. Actual DFT will vary dependent on substrate profile, application technique and waste factor.*
Note: DFT for 3-coursed rates includes 6 mils for the fabric.
‡Coating may be applied in a single pass, as long as the substrate and slope conditions allow (no slumping), and the required DFT (mils) are met.
[2] For new TPO or when 2 PLI is not met, contact GAF Desion Services.

ELASTUFF® 101 WITH ELASTUFF® 103 QUICK SPEC DIRECTORY

Spec Number	Substrate Specification	Page #
EL-1	Metal	77
EL-2	Smooth Asphaltic	78
EL-3	Granulated Asphaltic	79
EL-4	Structural Concrete	80
EL-5	Corrugated Structural Transite Panels	81
EL-6	Spray Polyurethane Foam (SPF)	82
EL-7	EPDM	83
EL -8	Aged TPO	84

Quick Specs are abbreviated specifications and are not meant to replace detailed specifications. Complete 3-part CSI System Specifications are available at www.gaf.com.

ELASTUFF® 101 WITH ELASTUFF® 103 QUICK SPEC

METAL (EL-1)

NOTE: The following "Quick Spec" is an abbreviated specification and is not meant to replace the detailed specification. Complete 3-part CSI System Specifications are available at www.gaf.com.

METHOD REQUIREMENTS

Required:

- ❍ Roof must be clean, dry and tight
- ❍ Apply at 40°F (4°C) and rising with no rain, dew, fog or freezing temperatures in forecast for 8 hours
- ❍ Adhesion test required
- ❍ Power washing required
- ❍ Rust should be removed with a wire brush prior to coating, and structural repairs should be made with like-materials as needed.

Recommendations:

- Refer to Technical Data Sheet for product specific application and surface temperature restrictions.

Installation Overview:

1. Before coating is applied, an adhesion test is required to ensure an adhesion minimum of 2.0 pounds per linear inch (PLI). Test patches should be applied with rates listed below.
2. Tighten/replace existing fasteners. Encapsulate with appropriate flashing material.
3. Power-wash substrate to remove contaminants that could negatively affect adhesion. Allow roof to completely dry.
4. Install crickets to divert water and complete other necessary sheet metal repairs.
5. Prime per chart below.
6. Treat all roof penetrations, drains, curbs, and scuppers. (Refer to Substrate Preparation section for requirements)
7. Horizontal seams must be 3-coursed. Overlap and trapezoidal vertical seams must be treated with flashing grade only. Other vertical seams may forgo treatment **IF** the seal/tape is intact on the seam or if they are double locked. (Refer to Seam Treatment Guide for requirements)
8. Apply coating per the chart below:

CLEAN / PRIME

	Product	Rate (Gal/Sq)
Cleaner	Cleaning Concentrate (diluted)	0.5 - 0.7
Primer	Metal Roof Primer	0.33 - 0.67

SEAMS & DETAILS

Treatment Type	Product	Total (Gal/Sq)	Total (linear ft/gal)+	DFT* (mils)
3-Coursed Rates	FlexSeal™ and Fabric	4.00	30	57
Flashing Grade Only Rates	FlexSeal™	2.00	100	26

Note: For other product options, please refer to our Seam Treatment Guide.
+Flashing rates are based on a 6" (152 mm) width.

METAL

Coverage Term	Elastuff® 101		Elastuff® 103		Total		Warranties/Guarantees Available	
	Base Coat (Gal/Sq)	DFT* (mils)	Top Coat Gal/Sq	DFT* (mils)	Total Gal/Sq	DFT* (mils)	Emerald Pledge™	Diamond Pledge™
10 Year	1.00	13	1.00	9	2.00	22	Yes	Yes
15 Year	1.25	16	1.50	14	2.75	30	Yes	Yes

** Dry Film Thickness (DFT) is rounded to nearest mil, and is theoretical. Actual DFT will vary dependent on substrate profile, application technique and waste factor.*
Note: DFT for 3-coursed rates includes 6 mils for the fabric.

ELASTUFF® 101 WITH ELASTUFF® 103 QUICK SPEC

SMOOTH ASPHALTIC (EL-2)

NOTE: The following "Quick Spec" is an abbreviated specification and is not meant to replace the detailed specification. Complete 3-part CSI System Specifications are available at www.gaf.com.

METHOD REQUIREMENTS

Required:

- ❍ Moisture survey required
- ❍ Remove and replace any wet areas
- ❍ Repair membrane with like materials
- ❍ Roof must be clean, dry and tight
- ❍ Apply at 40°F (4°C) and rising with no rain, dew, fog or freezing temperatures in forecast for 8 hours
- ❍ Adhesion test required
- ❍ Power washing required
- ❍ New membranes should be aged at least 30 days; 90+ days is ideal.

Restrictions:

Do not apply over gravel surfaced substrates.

Recommendations:

- Refer to Technical Data Sheet for product specific application and surface temperature restrictions.

Installation Overview:

1. Before coating is applied, an adhesion test is required to ensure an adhesion minimum of 2.0 pounds per linear inch (PLI). Test patches should be applied with rates listed below.
2. Power-wash substrate to remove contaminants that could negatively affect adhesion. Allow roof to completely dry.
3. All loose seams must be 3-coursed. All other seams must be treated with flashing grade only, no fabric required. (Refer to Substrate Preparation section for requirements)
4. Treat "alligatored" areas, surface cracks, roof penetrations, drains, curbs and scuppers. (Refer to Substrate Preparation section for requirements)
5. Apply coating per the chart below:

CLEAN

	Product	Rate (Gal/Sq)
Cleaner	Cleaning Concentrate (diluted)	0.5 - 0.7

SEAMS & DETAILS

Treatment Type	Product	Total (Gal/Sq)	Total (linear ft/gal)+	DFT* (mils)
3-Coursed Rates	FlexSeal™ and Fabric	4.00	30	57
Flashing Grade Only Rates	FlexSeal™	2.00	100	26

Note: For other product options, please refer to our Seam Treatment Guide.
+Flashing rates are based on a 6" (152 mm) width.

SMOOTH ASPHALTIC

Coverage Term	Elastuff® 101		Elastuff® 103			Total		Warranties/Guarantees Available	
	Base Coat (Gal/Sq)	DFT* (mils)	1st Coat Gal/Sq	2nd Coat Gal/Sq	DFT* (mils)	Total Gal/Sq	DFT* (mils)	Emerald Pledge™	Diamond Pledge™
10 Year	1.50	19	1.50		14	3.00	33	Yes	No
15 Year	1.50	19	1.00	1.25	21	3.75	40	Yes	No

** Dry Film Thickness (DFT) is rounded to nearest mil, and is theoretical. Actual DFT will vary dependent on substrate profile, application technique and waste factor.*
Note: DFT for 3-coursed rates includes 6 mils for the fabric.

ELASTUFF® 101 WITH ELASTUFF® 103 QUICK SPEC

GRANULATED ASPHALTIC (EL-3)

NOTE: The following "Quick Spec" is an abbreviated specification and is not meant to replace the detailed specification. Complete 3-part CSI System Specifications are available at www.gaf.com.

METHOD REQUIREMENTS

Required:

- ❍ Moisture survey required
- ❍ Remove and replace any wet areas
- ❍ Repair membrane with like materials
- ❍ Roof must be clean, dry and tight
- ❍ Apply at 40°F (4°C) and rising with no rain, dew, fog or freezing temperatures in forecast for 8 hours
- ❍ Power washing required
- ❍ New membranes should be aged at least 30 days; 90 + days is ideal.

Restrictions:

Do not apply over gravel surfaced substrates.

Recommendations:

- Refer to Technical Data Sheet for product specific application and surface temperature restrictions.

Installation Overview:

1. Power-wash substrate to remove contaminants that could negatively affect adhesion. Allow roof to completely dry.
2. Treat "alligatored" areas, surface cracks, roof penetrations, drains, curbs and scuppers. (Refer to Substrate Preparation section for requirements)
3. All loose seams must be 3-coursed. All other seams must be treated with flashing grade only, no fabric required. (Refer to Seam Treatment Guide for requirements)
4. Apply coating per the chart below:

CLEAN		
	Product	**Rate (Gal/Sq)**
Cleaner	Cleaning Concentrate (diluted)	0.5 - 0.7

SEAMS & DETAILS				
Treatment Type	**Product**	**Total (Gal/Sq)**	**Total (linear ft/ gal)⁺**	**DFT* (mils)**
3-Coursed Rates	FlexSeal™and Fabric	4.00	30	57
Flashing Grade Only Rates	FlexSeal™	2.00	100	26

Note: For other product options, please refer to our Seam Treatment Guide.
⁺Flashing rates are based on a 6" (152 mm) width.

GRANULATED ASPHALTIC									
Coverage Term	Elastuff® 101		Elastuff® 103			Total		Warranties/Guarantees Available	
	Base Coat (Gal/Sq)	DFT* (mils)	1st Coat Gal/Sq	2nd Coat Gal/Sq	DFT* (mils)	Total Gal/Sq	DFT* (mils)	Emerald Pledge™	Diamond Pledge™
10 Year	1.50	19	1.50		14	3.00	33	Yes	No
15 Year	1.50	19	1.00	1.25	21	3.75	40	Yes	No

** Dry Film Thickness (DFT) is rounded to nearest mil, and is theoretical. Actual DFT will vary dependent on substrate profile, application technique and waste factor.*
Note: DFT for 3-coursed rates includes 6 mils for the fabric.

ELASTUFF® 101 WITH ELASTUFF® 103 QUICK SPEC

STRUCTURAL CONCRETE (EL-4)

NOTE: The following "Quick Spec" is an abbreviated specification and is not meant to replace the detailed specification. Complete 3-part CSI System Specifications are available at www.gaf.com.

METHOD REQUIREMENTS

Required:

- ❍ Moisture survey required (Must contain less than 8% moisture)
- ❍ Repair deteriorated sections with like materials. Allow repairs to cure properly
- ❍ Roof must be clean, dry and tight
- ❍ Apply at 40°F (4°C) and rising with no rain, dew, fog or freezing temperatures in forecast for 8 hours
- ❍ Adhesion test required
- ❍ Power washing required
- ❍ Concrete must be fully cured

Recommendations:

- Refer to Technical Data Sheet for product specific application and surface temperature restrictions.

Installation Overview:

1. Before coating is applied, an adhesion test is required to ensure an adhesion minimum of 2.0 pounds per linear inch (PLI). Test patches should be applied with rates listed below.
2. Power-wash substrate to remove contaminants that could negatively affect adhesion. Allow roof to completely dry.
3. Prime per chart below.
4. Treat all roof penetrations, drains, curbs, and scuppers. (Refer to Substrate Preparation section for requirements)
5. Treat structural joints with backer rod and compatible sealant prior to seam treatment. (Refer to Seam Treatment Guide for requirements)
6. Control joints in excess of 1/16" (1.6 mm) shall be caulked with compatible caulk.
7. Apply coating per the chart below:

CLEAN / PRIME

	Product	Rate (Gal/Sq)
Cleaner	Cleaning Concentrate (diluted)	0.5 - 0.7
Primer	Bonding Primer	0.20 - 0.25

SEAMS & DETAILS

Treatment Type	Product	Total (Gal/Sq)	Total (linear ft/gal)+	DFT* (mils)
3-Coursed Rates	FlexSeal™ and Fabric	4.00	30	57
Flashing Grade Only Rates	FlexSeal™	2.00	100	26

Note: For other product options, please refer to our Seam Treatment Guide.
+Flashing rates are based on a 6" (152 mm) width.

STRUCTURAL CONCRETE

Coverage Term	Elastuff® 101		Elastuff® 103			Total		Warranties/Guarantees Available	
	Base Coat (Gal/Sq)	DFT* (mils)	1st Coat Gal/Sq	2nd Coat Gal/Sq	DFT* (mils)	Total Gal/Sq	DFT* (mils)	Emerald Pledge™	Diamond Pledge™
10 Year	1.50	19	1.50		14	3.00	33	Yes	No
15 Year	1.50	19	1.00	1.25	21	3.75	40	Yes	No

** Dry Film Thickness (DFT) is rounded to nearest mil, and is theoretical. Actual DFT will vary dependent on substrate profile, application technique and waste factor.*
Note: DFT for 3-coursed rates includes 6 mils for the fabric.

ELASTUFF® 101 WITH ELASTUFF® 103 QUICK SPEC

CORRUGATED STRUCTURAL TRANSITE PANELS (EL-5)

NOTE: The following "Quick Spec" is an abbreviated specification and is not meant to replace the detailed specification. Complete 3-part CSI System Specifications are available at www.gaf.com.

METHOD REQUIREMENTS

Required:

- ❍ Moisture survey required
- ❍ Remove and replace any wet areas
- ❍ Repair membrane with like materials
- ❍ Roof must be clean, dry and tight
- ❍ Apply at 40°F (4°C) and rising with no rain, dew, fog or freezing temperatures in forecast for 8 hours
- ❍ Adhesion test required
- ❍ Power washing required

Recommendations:

- Refer to Technical Data Sheet for product specific application and surface temperature restrictions.

Installation Overview:

1. Before coating is applied, an adhesion test is required to ensure an adhesion minimum of 2.0 pounds per linear inch (PLI). Test patches should be applied with rates listed below.
2. Power-wash substrate to remove contaminants that could negatively affect adhesion. Allow roof to completely dry.
3. Tighten/replace existing fasteners. Encapsulate with appropriate flashing material.
4. Prime per chart below.
5. Treat all roof penetrations, drains, curbs, and scuppers. (Refer to Substrate Preparation section for requirements)
6. Treat transite gaps in excess of 1/16" with compatible caulk prior to seam treatment. (Refer to Seam Treatment Guide for requirements)
7. All loose seams must be 3-coursed with flashing grade and fabric. All other seams must be treated with flashing grade only, no fabric required.
8. Apply coating per the chart below:

CLEAN / PRIME

	Product	Rate (Gal/Sq)
Cleaner	Cleaning Concentrate (diluted)	0.5 - 0.7
Primer	Bonding Primer	0.20 - 0.25

SEAMS & DETAILS

Treatment Type	Product	Total (Gal/Sq)	Total (linear ft/gal)+	DFT* (mils)
3-Coursed Rates	FlexSeal™and Fabric	4.00	30	57
Flashing Grade Only Rates	FlexSeal™	2.00	100	26

Note: For other product options, please refer to our Seam Treatment Guide.
+Flashing rates are based on a 6" (152 mm) width.

CORRUGATED STRUCTURAL TRANSITE PANELS

Coverage Term	Elastuff® 101		Elastuff® 103			Total		Warranties/Guarantees Available	
	Base Coat (Gal/Sq)	DFT* (mils)	1st Coat Gal/Sq	2nd Coat Gal/Sq	DFT* (mils)	Total Gal/Sq	DFT* (mils)	Emerald Pledge™	Diamond Pledge™
10 Year	1.50	19	1.50		14	3.00	33	Yes	No
15 Year	1.50	19	1.00	1.25	21	3.75	40	Yes	No

** Dry Film Thickness (DFT) is rounded to nearest mil, and is theoretical. Actual DFT will vary dependent on substrate profile, application technique and waste factor.*
Note: DFT for 3-coursed rates includes 6 mils for the fabric.
***Important Note:** Corrugated transite panels may contain asbestos. Follow all local, state and federal regulations concerning asbestos. Under no cicumstances does GAF have any liability for any damages, costs or expenses arising out of or associated with the pre-existing presence of asbestos containing materials or any other allegedly hazardous substances or materials upon the roof to which the new GAF roofing materials are being applied.*

ELASTUFF® 101 WITH ELASTUFF® 103 QUICK SPEC

SPRAY POLYURETHANE FOAM (EL-6)

NOTE: The following "Quick Spec" is an abbreviated specification and is not meant to replace the detailed specification. Complete 3-part CSI System Specifications are available at www.gaf.com.

METHOD REQUIREMENTS

Required:

- ❍ Moisture survey required
- ❍ Remove and replace any wet areas
- ❍ Repair substrate with like materials
- ❍ Roof must be clean, dry and tight
- ❍ Apply at 40°F (4°C) and rising with no rain, dew, fog or freezing temperatures in forecast for 8 hours

Recommendations:

- For additional information regarding SPF, contact the specific SPF manufacturer and/or refer to sprayfoam.org.
- Refer to Technical Data Sheet for product specific application and surface temperature restrictions.
- Optional: clean roofing granules may be embedded in final coat.

Installation Overview:

1. Treat all roof penetrations, drains, curbs, and scuppers. (Refer to Substrate Preparation section for requirements)
2. Apply coating per the chart below:

SEAMS & DETAILS

Treatment Type	Product	Total (Gal/Sq)	Total (linear ft/gal)+	DFT* (mils)
3-Coursed Rates	FlexSeal™ and Fabric	4.00	30	57
Flashing Grade Only Rates	FlexSeal™	2.00	100	26

Note: For other product options, please refer to our Seam Treatment Guide.
+Flashing rates are based on a 6" (152 mm) width.

SPRAY POLYURETHANE FOAM

Coverage Term	Elastuff® 101		Elastuff® 103			Total		Warranties/Guarantees Available	
	Base Coat (Gal/Sq)	DFT* (mils)	1st Coat Gal/Sq	2nd Coat Gal/Sq	DFT* (mils)	Total Gal/Sq	DFT* (mils)	Emerald Pledge™	Diamond Pledge™
10 Year	1.50	19	1.50		14	3.00	33	Yes	No
15 Year	1.50	19	1.00	1.25	21	3.75	40	Yes	No

** Dry Film Thickness (DFT) is rounded to nearest mil, and is theoretical. Actual DFT will vary dependent on substrate profile, application technique and waste factor.*
Note: DFT for 3-coursed rates includes 6 mils for the fabric.

ELASTUFF® 101 WITH ELASTUFF® 103 QUICK SPEC

EPDM (EL-7)

NOTE: The following "Quick Spec" is an abbreviated specification and is not meant to replace the detailed specification. Complete 3-part CSI System Specifications are available at www.gaf.com.

METHOD REQUIREMENTS

Required:

- ❍ Moisture survey required
- ❍ Remove and replace any wet areas
- ❍ Repair membrane with like materials
- ❍ Roof must be clean, dry and tight
- ❍ Apply at 40°F (4°C) and rising with no rain, dew, fog or freezing temperatures in forecast for 8 hours
- ❍ Adhesion test required
- ❍ Power washing required

Recommendations:

- Refer to Technical Data Sheet for product specific application and surface temperature restrictions.

Installation Overview:

1. Before coating is applied, an adhesion test is required to ensure an adhesion minimum of 2.0 pounds per linear inch (PLI). Test patches should be applied with rates listed below.
2. Power-wash substrate to remove contaminants that could negatively affect adhesion. Allow roof to completely dry.
3. Treat all roof penetrations, drains, curbs, and scuppers. (Refer to Substrate Preparation section for requirements)
4. All loose seams must be 3-coursed. All other seams must be treated with flashing grade only, no fabric required (refer to Seam Treatment Guide for requirements).
5. Apply coating per the chart below:

CLEAN/ PRIMER

	Product	Rate (Gal/Sq)
Cleaner[2]	Cleaning Concentrate (diluted)	0.5 - 0.7
Primer	EPDM Activator	0.20

[2] Cleaner is only required for heavy dirt build up

SEAMS & DETAILS

Treatment Type	Product	Total (Gal/Sq)	Total (linear ft/ gal)+	DFT* (mils)
3-Coursed Rates	FlexSeal™ and Fabric	4.00	30	57
Flashing Grade Only Rates	FlexSeal™	2.00	100	26

Note: For other product options, please refer to our Seam Treatment Guide.
+Flashing rates are based on a 6" (152 mm) width.

EPDM

Coverage Term	Elastuff® 101		Elastuff® 103			Total		Warranties/Guarantees Available	
	Base Coat (Gal/Sq)	DFT* (mils)	1st Coat Gal/Sq	2nd Coat Gal/Sq	DFT* (mils)	Total Gal/Sq	DFT* (mils)	Emerald Pledge™	Diamond Pledge™
10 Year	1.50	19	1.50		14	3.00	33	Yes	No
15 Year	1.50	19	1.00	1.25	21	3.75	40	Yes	No

** Dry Film Thickness (DFT) is rounded to nearest mil, and is theoretical. Actual DFT will vary dependent on substrate profile, application technique and waste factor.*
Note: DFT for 3-coursed rates includes 6 mils for the fabric.

ELASTUFF® 101 WITH ELASTUFF® 103 QUICK SPEC

AGED TPO (EL-8)

NOTE: The following "Quick Spec" is an abbreviated specification and is not meant to replace the detailed specification. Complete 3-part CSI System Specifications are available at www.gaf.com.

METHOD REQUIREMENTS

Required:

- ❍ Moisture survey required
- ❍ Remove and replace any wet areas
- ❍ Repair membrane with like materials
- ❍ Roof must be clean, dry and tight
- ❍ Apply at 40°F (4°C) and rising with no rain, dew, fog or freezing temperatures in forecast for 8 hours
- ❍ Adhesion test required[2]
- ❍ Power washing required

Recommendations:

- Refer to Technical Data Sheet for product specific application and surface temperature restrictions.

Installation Overview:

1. Before coating is applied, an adhesion test is required to ensure an adhesion minimum of 2.0 pounds per linear inch (PLI). Test patches should be applied with rates listed below[2].
2. Power-wash substrate to remove contaminants that could negatively affect adhesion. Allow roof to completely dry.
3. Treat all roof penetrations, drains, curbs, and scuppers. (Refer to Substrate Preparation section for requirements)
4. Apply coating per the chart below:

CLEAN

	Product	Rate (Gal/Sq)
Cleaner	Cleaning Concentrate (diluted)	0.5 - 0.7

SEAMS & DETAILS

Treatment Type	Product	Total (Gal/Sq)	Total (linear ft/gal)+	DFT* (mils)
3-Coursed Rates	FlexSeal™and Fabric	4.00	30	57
Flashing Grade Only Rates	FlexSeal™	2.00	100	26

Note: For other product options, please refer to our Seam Treatment Guide.
+Flashing rates are based on a 6" (152 mm) width.

AGED TPO

Coverage Term	Elastuff® 101		Elastuff® 103			Total		Warranties/Guarantees Available	
	Base Coat (Gal/Sq)	DFT* (mils)	1st Coat Gal/Sq	2nd Coat Gal/Sq	DFT* (mils)	Total Gal/Sq	DFT* (mils)	Emerald Pledge™	Diamond Pledge™
10 Year	1.50	19	1.50		14	3.00	33	Yes	No
15 Year	1.50	19	1.00	1.25	21	3.75	40	Yes	No

** Dry Film Thickness (DFT) is rounded to nearest mil, and is theoretical. Actual DFT will vary dependent on substrate profile, application technique and waste factor.*
Note: DFT for 3-coursed rates includes 6 mils for the fabric.
[2] For new TPO or when 2 PLI is not met, contact GAF Design Services

SURFACE SEAL SB QUICK SPEC DIRECTORY

Spec Number	Substrate Specification	Page #
SS-1	Metal	86
SS-2	EPDM	87
SS-3	Smooth Asphaltic	88
SS-4	Granulated Asphaltic	89
SS-5	Structural Concrete	90

Quick Specs are abbreviated specifications and are not meant to replace detailed specifications. Complete 3-part CSI System Specifications are available at www.gaf.com.

SURFACE SEAL SB QUICK SPEC

METAL (SS-1)

NOTE: The following "Quick Spec" is an abbreviated specification and is not meant to replace the detailed specification. Complete 3-part CSI System Specifications are available at www.gaf.com.

METHOD REQUIREMENTS

Required:

- ❍ Roof must be clean, dry and tight
- ❍ Apply at 40°F (4°C) and rising with no rain, dew, fog or freezing temperatures in forecast for 8 hours
- ❍ Adhesion test required
- ❍ Power washing required
- ❍ Rust should be removed with a wire brush prior to coating, and structural repairs should be made with like-materials as needed.

Recommendations:

- Refer to Technical Data Sheet for product specific application and surface temperature restrictions.

Installation Overview:

1. Before coating is applied, an adhesion test is required to ensure an adhesion minimum of 2.0 pounds per linear inch (PLI). Test patches should be applied with rates listed below.
2. Tighten/replace existing fasteners. Encapsulate with appropriate flashing material.
3. Power-wash substrate to remove contaminants that could negatively affect adhesion. Allow roof to completely dry.
4. Install crickets to divert water and complete other necessary sheet metal repairs.
5. Prime per chart below.
6. Treat all roof penetrations, drains, curbs, and scuppers. (Refer to Substrate Preparation section for requirements)
7. Horizontal seams must be 3-coursed. Overlap and trapezoidal vertical seams must be treated with flashing grade only. Other vertical seams may forgo treatment **IF** the seal/tape is intact on the seam or if they are double locked. (Refer to Seam Treatment Guide for requirements)
8. Apply coating per the chart below:

CLEAN / PRIME

	Product	Rate (Gal/Sq)
Cleaner	Cleaning Concentrate (diluted)	0.5 - 0.7
Primer	Metal Roof Primer	0.33 - 0.67

SEAMS & DETAILS

Treatment Type	Product	Total (Gal/Sq)	Total (linear ft/gal)+	DFT* (mils)
3-Coursed Rates	FlexSeal™ and Fabric	4.00	30	48
Flashing Grade Only Rates	FlexSeal™ Flashing	2.00	100	21

Note: For other product options, please refer to our Seam Treatment Guide.
+Flashing rates are based on a 6" (152 mm) width.

METAL

Coverage Term	Coating			Total		Warranties/Guarantees Available	
	1st Coat Gal/Sq	2nd Coat Gal/Sq	3rd Coat Gal/Sq	Gal/Sq	DFT* (mils)	Emerald Pledge™	Diamond Pledge™
10 Year	1.00	1.50		2.50	20	Yes	Yes
15 Year	1.00	1.50	1.00	3.50	28	Yes	Yes
20 Year	1.50	1.50	1.50	4.50	36	Yes	Yes

** Dry Film Thickness (DFT) is rounded to nearest mil, and is theoretical. Actual DFT will vary dependent on substrate profile, application technique and waste factor.*
Note: DFT for 3-coursed rates includes 6 mils for the fabric.

SURFACE SEAL SB QUICK SPEC

EPDM (SS-2)

NOTE: The following "Quick Spec" is an abbreviated specification and is not meant to replace the detailed specification. Complete 3-part CSI System Specifications are available at www.gaf.com.

METHOD REQUIREMENTS

Required:

- ❍ Moisture survey required
- ❍ Remove and replace any wet areas
- ❍ Repair membrane with like materials
- ❍ Roof must be clean, dry and tight
- ❍ Apply at 40°F (4°C) and rising with no rain, dew, fog or freezing temperatures in forecast for 8 hours
- ❍ Adhesion test required
- ❍ Power washing required

Recommendations:

- Refer to Technical Data Sheet for product specific application and surface temperature restrictions.

Installation Overview:

1. Before coating is applied, an adhesion test is required to ensure an adhesion minimum of 2.0 pounds per linear inch (PLI). Test patches should be applied with rates listed below.
2. Power-wash substrate to remove contaminants that could negatively affect adhesion. Allow roof to completely dry.
3. Prime per chart below.
4. Treat all roof penetrations, drains, curbs, and scuppers. (Refer to Substrate Preparation section for requirements)
5. All loose seams must be 3-coursed. All other seams must be treated with flashing grade only, no fabric required. (Refer to Seam Treatment Guide for requirements)
6. Apply coating per the chart below:

CLEAN / PRIME

	Product	Rate (Gal/Sq)
Cleaner	Cleaning Concentrate (diluted)	0.5 - 0.7
Primer	EPDM Activator	0.50 - 0.67

SEAMS & DETAILS

Treatment Type	Product	Total (Gal/Sq)	Total (linear ft/gal)+	DFT* (mils)
3-Coursed Rates	FlexSeal™ and Fabric	4.00	30	48
Flashing Grade Only Rates	FlexSeal™ Flashing	2.00	100	21

Note: For other product options, please refer to our Seam Treatment Guide.
+Flashing rates are based on a 6" (152 mm) width.

EPDM

Coverage Term	Coating			Total		Warranties/Guarantees Available	
	1st Coat Gal/Sq	2nd Coat Gal/Sq	3rd Coat Gal/Sq	Gal/Sq	DFT* (mils)	Emerald Pledge™	Diamond Pledge™
10 Year	1.25	1.50		2.75	22	Yes	No
15 Year	1.25	1.50	1.00	3.75	30	Yes	No

** Dry Film Thickness (DFT) is rounded to nearest mil, and is theoretical. Actual DFT will vary dependent on substrate profile, application technique and waste factor.*
Note: DFT for 3-coursed rates includes 6 mils for the fabric.

SURFACE SEAL SB QUICK SPEC

SMOOTH ASPHALTIC (SS-3)

NOTE: The following "Quick Spec" is an abbreviated specification and is not meant to replace the detailed specification. Complete 3-part CSI System Specifications are available at www.gaf.com.

METHOD REQUIREMENTS

Required:

- ❍ Moisture survey required
- ❍ Remove and replace any wet areas
- ❍ Repair membrane with like materials
- ❍ Roof must be clean, dry and tight
- ❍ Apply at 40°F (4°C) and rising with no rain, dew, fog or freezing temperatures in forecast for 8 hours
- ❍ Adhesion test required
- ❍ Power washing required
- ❍ New membranes should be aged at least 30 days; 90+ days is ideal.

Restrictions:

Do not apply over gravel surfaced substrates.

Recommendations:

- Refer to Technical Data Sheet for product specific application and surface temperature restrictions.

Installation Overview:

1. Before coating is applied, an adhesion test is required to ensure an adhesion minimum of 2.0 pounds per linear inch (PLI). Test patches should be applied with rates listed below.
2. Power-wash substrate to remove contaminants that could negatively affect adhesion. Allow roof to completely dry.
3. Prime per chart below.
4. Treat "alligatored" areas, surface cracks, roof penetrations, drains, curbs and scuppers. (Refer to Substrate Preparation section for requirements)
5. All loose seams must be 3-coursed. All other seams must be treated with flashing grade only, no fabric required. (Refer to Seam Treatment Guide for requirements)
6. Apply coating per the chart below:

CLEAN / PRIME

	Product	Rate (Gal/Sq)
Cleaner	Cleaning Concentrate (diluted)	0.5 - 0.7
Primer	Multi-Purpose Primer	0.67 - 1.00

SEAMS & DETAILS

Treatment Type	Product	Total (Gal/Sq)	Total (linear ft/ gal)+	DFT* (mils)
3-Coursed Rates	FlexSeal™ and Fabric	4.00	30	48
Flashing Grade Only Rates	FlexSeal™ Flashing	2.00	100	21

Note: For other product options, please refer to our Seam Treatment Guide.
+Flashing rates are based on a 6" (152 mm) width.

SMOOTH ASPHALTIC

Coverage Term	Coating			Total		Warranties/Guarantees Available	
	1st Coat Gal/Sq	2nd Coat Gal/Sq	3rd Coat Gal/Sq	Gal/Sq	DFT* (mils)	Emerald Pledge™	Diamond Pledge™
10 Year	1.50	1.50		3.00	24	Yes	No
15 Year	1.50	1.50	1.00	4.00	32	Yes	No

** Dry Film Thickness (DFT) is rounded to nearest mil, and is theoretical. Actual DFT will vary dependent on substrate profile, application technique and waste factor.*
Note: DFT for 3-coursed rates includes 6 mils for the fabric.

SURFACE SEAL SB QUICK SPEC

GRANULATED ASPHALTIC (SS-4)

NOTE: The following "Quick Spec" is an abbreviated specification and is not meant to replace the detailed specification. Complete 3-part CSI System Specifications are available at www.gaf.com.

METHOD REQUIREMENTS

Required:

- ❍ Moisture survey required
- ❍ Remove and replace any wet areas
- ❍ Repair membrane with like materials
- ❍ Roof must be clean, dry and tight
- ❍ Apply at 40°F (4°C) and rising with no rain, dew, fog or freezing temperatures in forecast for 8 hours
- ❍ Power washing required
- ❍ New membranes should be aged at least 30 days; 90 + days is ideal.

Restrictions:

Do not apply over gravel surfaced substrates.

Recommendations:

- Refer to Technical Data Sheet for product specific application and surface temperature restrictions.

Installation Overview:

1. Power-wash substrate to remove contaminants that could negatively affect adhesion. Allow roof to completely dry.
2. Prime per chart below.
3. Treat "alligatored" areas, surface cracks, roof penetrations, drains, curbs and scuppers. (Refer to Substrate Preparation section for requirements)
4. All loose seams must be 3-coursed. All other seams must be treated with flashing grade only, no fabric required. (Refer to Seam Treatment Guide for requirements)
5. Apply coating per the chart below:

CLEAN / PRIME

	Product	Rate (Gal/Sq)
Cleaner	Cleaning Concentrate (diluted)	0.5 - 0.7
Primer	Multi-Purpose Primer	1.00 - 1.33

SEAMS & DETAILS

Treatment Type	Product	Total (Gal/Sq)	Total (linear ft/gal)+	DFT* (mils)
3-Coursed Rates	FlexSeal™ and Fabric	4.00	30	48
Flashing Grade Only Rates	FlexSeal™ Flashing	2.00	100	21

Note: For other product options, please refer to our Seam Treatment Guide.
+Flashing rates are based on a 6" (152 mm) width.

GRANULATED ASPHALTIC

Coverage Term	Coating			Total		Warranties/Guarantees Available	
	1st Coat Gal/Sq	2nd Coat Gal/Sq	3rd Coat Gal/Sq	Gal/Sq	DFT* (mils)	Emerald Pledge™	Diamond Pledge™
10 Year	1.50	1.50		3.00	24	Yes	No
15 Year	1.50	1.50	1.00	4.00	32	Yes	No

** Dry Film Thickness (DFT) is rounded to nearest mil, and is theoretical. Actual DFT will vary dependent on substrate profile, application technique and waste factor.*
Note: DFT for 3-coursed rates includes 6 mils for the fabric.

SURFACE SEAL SB QUICK SPEC

STRUCTURAL CONCRETE (SS-5)

NOTE: The following "Quick Spec" is an abbreviated specification and is not meant to replace the detailed specification. Complete 3-part CSI System Specifications are available at www.gaf.com.

METHOD REQUIREMENTS

Required:

- ❍ Moisture survey required (Must contain less than 8% moisture)
- ❍ Repair deteriorated sections with like materials. Allow repairs to cure properly
- ❍ Roof must be clean, dry and tight
- ❍ Apply at 40°F (4°C) and rising with no rain, dew, fog or freezing temperatures in forecast for 8 hours
- ❍ Adhesion test required
- ❍ Power washing required
- ❍ Concrete must be fully cured

Recommendations:

- Refer to Technical Data Sheet for product specific application and surface temperature restrictions.

Installation Overview:

1. Before coating is applied, an adhesion test is required to ensure an adhesion minimum of 2.0 pounds per linear inch (PLI). Test patches should be applied with rates listed below.
2. Power-wash substrate to remove contaminants that could negatively affect adhesion. Allow roof to completely dry.
3. Prime per chart below.
4. Treat all roof penetrations, drains, curbs, and scuppers. (Refer to Substrate Preparation section for requirements)
5. Treat structural joints with backer rod and compatible sealant prior to seam treatment. (Refer to Seam Treatment Guide for requirements)
6. Control joints in excess of 1/16" (1.6 mm) shall be caulked with compatible caulk.
7. Apply coating per the chart below:

CLEAN / PRIME

	Product	Rate (Gal/Sq)
Cleaner	Cleaning Concentrate (diluted)	0.5 - 0.7
Primer	Bonding Primer	0.20 - 0.25

SEAMS & DETAILS

Treatment Type	Product	Total (Gal/Sq)	Total (linear ft/gal)+	DFT* (mils)
3-Coursed Rates	FlexSeal™ and Fabric	4.00	30	48
Flashing Grade Only Rates	FlexSeal™ Flashing	2.00	100	21

Note: For other product options, please refer to our Seam Treatment Guide.
+Flashing rates are based on a 6" (152 mm) width.

STRUCTURAL CONCRETE

Coverage Term	Coating			Total		Warranties/Guarantees Available	
	1st Coat Gal/Sq	2nd Coat Gal/Sq	3rd Coat Gal/Sq	Gal/Sq	DFT* (mils)	Emerald Pledge™	Diamond Pledge™
10 Year	1.50	1.50		3.00	24	Yes	No
15 Year	1.50	1.50	1.00	4.00	32	Yes	No

** Dry Film Thickness (DFT) is rounded to nearest mil, and is theoretical. Actual DFT will vary dependent on substrate profile, application technique and waste factor.*
Note: DFT for 3-coursed rates includes 6 mils for the fabric.

SECTION 4

Care & Preventative Maintenance

OVERVIEW

Due to its constant exposure to heat, cold, ultraviolet rays, rain, snow, hail, high winds and/or physical damage, a roof can be the one of the most vulnerable component of a building's exterior. Despite exposure to these negative effects, long-term performance can be enhanced, and major roof problems can be mitigated or avoided, through correct design, quality materials, proper installation procedures and workmanship, and a comprehensive roof maintenance program. The cost of a comprehensive maintenance program is minimal compared to the cost of repairing and/or replacing a damaged roofing system.

The roofing system is a critical asset in the overall building envelope, and should be treated as such. Identifying and correcting potential problems early is important to help prevent small problem from becoming bigger issues. It helps to maintain the integrity of the roof, protect the building's contents, and avoid interruption of the building's intended function. A thorough and consistent maintenance schedule can also help extend the life of the roofing system and lower life cycle and replacement costs.

UNDERSTANDING THE IMPORTANCE OF PROPER ROOF MAINTENANCE AND REPAIR

Like all roofing systems, roofs that have been coated require regular maintenance and repair. The Roof Coatings Manufacturers Association (RCMA) recommends that roofs and coatings be inspected twice each year, generally in the spring and fall, and after any major storms or high speed wind events. Additional coating should be applied as necessary to repair damage to the coating or underlying roofing substrate. Additional coating can also be applied where the existing coating has worn away. Refer to the specific sections of this manual for more information on coating and re-coating applications.

The following is a list of general care and maintenance recommendations that will help achieve maximum performance from the roofing system.

- Provide proper drainage to minimize standing water on the roof. Keep the roof surface clean from leaves, pine needles, twigs, paper, accumulated dirt and other debris, which may accumulate and result in clogged drains. Cut back trees or branches growing too close to the roof.
- Ponding water on the surface of the roofing system will increase the probability of moisture entering the structure in the event of a puncture or other mechanical damage to the roofing membrane.
- Check the building exterior for settlement or movement. Cracks in the walls are a warning of possible cracks in the roof substrate and flashing. Ensure that overhangs, cornices, fascia, and edging are in good condition.
- Avoid damaging the roofing system by exposing it to any of the following, which could cause premature degradation of the coating or membrane:
    - Liquids containing petroleum products
    - Solvents
    - Grease used for lubricating rooftop units or from restaurant vents
    - Oils (new or old) used for air conditioning or compressor units
    - Kitchen waste or other animal fats
    - Chemicals

- The use of catch pans (including proper drainage of these pans or other means of protection) may be used to protect the roofing membrane from exposure to grease, chemicals, and other materials that would otherwise be expelled onto the roof surface. Prolonged exposure to these materials can cause swelling and possible degradation of the roofing system if spills are not removed in a timely manner.
- Check for signs of algae, mold, mildew or other plant growth on the roof, particularly in shaded areas that hold water.
- Unprotected areas of the roofing system are more susceptible to damage from heavy foot traffic and additional measures must be taken to avoid damage to the system. See options below and/or contact GAF for recommendations where heavy foot traffic is expected.
- If snow removal is necessary, use plastic shovels and be careful when working around protrusions or other areas where detail work could be damaged. Snow blowers, picks, axes and shovels with sharp edges must not be used on the roof.
- Remove foreign debris, such as glass, bolts, nails, screws, metal shavings, and any other materials that may cause punctures or cuts to the liquid-applied roofing system.
- Limit roof access. Most roof damage is caused by individuals that are not authorized to access the roof, or by individuals that are not aware of the damage that can be caused when proper precautionary procedures are not followed. Roof access should be strictly limited to authorized personnel and outside personnel should be informed as to the precautions necessary when accessing the roof. Make a log of all

visitors and maintenance personnel accessing the roof.

- Make sure that maintenance personnel are warned against dropping tools and equipment on the coated roof surface in order to avoid punctures. When servicing the rooftop HVAC units, antennas, solar panels, satellite dishes, etc., care should be taken when placing tools, metal doors, lids, pans, or sharp objects on the coating system surface. When moving roof-mounted units or equipment over coated roofs, avoid damage by placing smooth plywood over the surface prior to moving any equipment.
- Repair of any damage caused by physical damage to the roofing system is the responsibility of the Building Owner. The Building Owner is also responsible for ensuring that any such damage is properly repaired by either the original contractor of record or another GAF-certified contractor. If timely repairs are not made to rectify physical damage to the roofing system, this can result in the need for major repairs or replacement of the roof or roof coating system at the Building Owner's sole expense.

SEMI-ANNUAL INSPECTIONS

When conducting a semi-annual inspection, the liquid-applied roofing may be slippery when wet. Exercise caution when walking on the liquid-applied roofing during or after a rain shower, or if moisture is present in the form of dew, frost or ice. Pay attention while walking on light-colored surfaces as ice or frost build-up may not be as visible as on a dark surface.

Semi-Annual Inspections...

Consist of a cleaning and visual examination of the roof coating system. The inspection should include the overall coating condition as well as the integrity of flashings, vent pipes and other protrusions, skylights, drains, gutters, parapet walls and caps, adjacent walls, and mechanical equipment. Also check for evidence of any biological growth or other foreign debris.

Preventative Maintenance Program...

Consists of regularly scheduled inspections and subsequent corrective actions, intended to maximize the life expectancy of the roofing system. It is recommended that preventative maintenance semi-annual inspections be scheduled in the spring and fall.

Additional Inspections

In addition to the scheduled semi-annual inspection, additional inspections should be scheduled if the roof is exposed to physical damage or unusual conditions including but not limited to those listed below. Maintenance programs that include semi-annual inspections can usually be arranged through the installing contractor or another GAF-certified contractor. They can also be performed by a registered roof consultant or other qualified personnel who have been properly trained in liquid-applied roofing and safety. These inspections should be attended by the Building Owner and/or in-house maintenance personnel responsible for the roof. Additional roof inspections should be conducted whenever any of the following conditions occur:

1. Exposure of the roof to severe weather, such as strong winds, hail or continuous heavy rainfall.
   - Examine the roof for severely ponded areas, accumulated debris, and any damage to the building components that may allow moisture to infiltrate the roofing membrane. The liquid-applied roofing should also be examined in areas where severe conditions may have caused punctures, tears, abrasions or loose coating.

2. After repair or replacement of rooftop equipment, or at any other time when the roof may be exposed to activities from other trades where damage may occur.
   - Examine the roof for spills, debris, sharp objects, punctures, excessive wear, or other damage caused by heavy traffic or modifications to the roof.

Cleaning Procedures

WARNING: The liquid-applied roofing may be slippery when wet. Exercise caution when walking on the liquid-applied roofing during cleaning.

1. Remove any build-up of rocks, branches, leaves, pine needles and other foreign debris, as well as excessive dirt build-up around drains and other low areas. Use a plastic rake, medium-bristle push brush or other appropriate method for removing this accumulated debris from the roof, using the least amount of pressure possible. Remove any excessive build-up or blockage from drains, gutters and downspouts. Ensure that downspouts on multi-level roofs do not dump directly onto the coated roof surface below. Trim any overhanging trees to prevent excessive leaf and pine needle accumulation, allowing as much sunlight to the roof as possible to help eliminate mildew and algae growth.

2. Liberally apply GAF Cleaning Concentrate, diluted at a ratio of 1 part concentrate to 10 parts water, under low pressure to a given section of the roof at the rate of 0.4 to 0.7 gallons per 100 ft2 (1.6 to 2.9 L/m2). Allow the cleaner to sit for a minimum of 15 minutes.

3. Make sure that areas where algae, mold, or mildew growth has occurred are thoroughly saturated. These areas should also receive additional scrubbing with a medium to stiff bristle brush to assure the most complete removal possible.

4. Pressure rinse toward the drains using clean water and a 1,200 to 1,500 psi pressure washer. Use a fan tip on the extension wand, held no closer than 12" (305 mm) from the coated roof surface. Low areas where the dirt has accumulated may require additional agitation using a broom or cleaning pad.

IMPORTANT: Roof wash-off catchment systems should be in place when required. Be sure to follow state and local requirements for roof-wash off catchments during the cleaning process.

INSPECTION CHECKLIST

Pre-Inspection

Prior to the actual roof inspection, a detailed roof plan should be prepared, on which any defects and notes can be recorded.

Prior to going onto the roof itself, inspect the underside of the deck (if accessible), as well as the outside of the building. Note any signs of excessive moisture, staining, or deterioration. These observations can give clues to not only problems with the roof, but also other conditions affecting the performance of the building envelope.

GAF Inspection Checklist		
Area of Concern	**Treatment**	✓
Roof Membrane & Flashings	• Ensure that the overall liquid-applied roofing is sound and free of mechanical damage, splits, crazing, and cracking. In areas prone to standing water, inspect the coating surface for signs of blisters, delamination, or degradation caused by biological growth.	
Roof Drains & Scuppers	• Ensure that roof drains and scuppers are clear and free of all debris to allow for proper drainage. Check drain covers to verify that they are tight and properly fastened. Ensure that the liquid-applied roofing around drains and scuppers is sound and free of blisters, tears, and delaminations.	
Gutters	• Ensure that gutters are clean and free of any debris that will inhibit proper drainage. If drains are coated, inspect coating to ensure that it is sound and free of blisters, tears and delaminations.	
Parapet Walls & Caps	• Inspect interface between roof deck and parapet walls to ensure that there are no splits or tears, and that the liquid-applied roofing is fully-adhered and sound. Examine parapet walls and caps to ensure that there are no cracks or breaks in the substrate or membrane that will allow moisture to enter beneath the liquid-applied roofing system.	
Protrusions	• Inspect the liquid-applied roofing around all protrusions, such as vent pipes, for any signs of splits, tears or delaminations around the base. Ensure that vent pipes have the proper caps installed. Inspect liquid-applied roofing to ensure that it is still self-flashing and secure around the top of all protrusions.	
Roof Mounted Equipment	• All rooftop equipment should be inspected to ensure that it is well-secured to the base risers, and that the liquid-applied roofing around the base is sound and free of blisters, tears and delaminations.	
Skylights	• Check the reinforcement around all skylights to ensure that it is sound and free of blisters, tears and delaminations.	
Other Details	• Check the bricks and mortar on chimneys, as well as caulking or joints in metal flashings such as copings, counter-flashings, rooftop units, curbs, caps, expansion joints, etc. Repair or replace caulking as necessary.	
Moisture Analysis (optional)	• If damage has caused concern with moisture penetration into the roof substrate, a non- destructive moisture detection survey can be conducted to provide an accurate analysis. Two common methods are nuclear metering and infrared thermography. A moisture meter probe can also be inserted through the liquid-applied roofing; however, this is a destructive method and will require the damage be repaired.	
Minor Repairs	• Areas found to need minior repairs (e.g., small punctures and tears) during the inspection may be repaired with GAF RepairPro Sealant (on non-silicone roofs) or SIlicone Mastic (on silicone coated roofs). More extensive repairs may be treated with FlexSeal Sealant with Premium Farbic. Silicone coated roofs, use Silicone Mastic and Premium Fabric. For project specific recommendations, please contact GAF's Design Services.	

ROOF SPECIFIC LEAK INVESTIGATION

On metal decks, it is important to identify the direction of the deck flutes and deck slope. Moisture may infiltrate through the roofing system, migrate in the lower flutes of the deck, and leak inside the building in low areas.

On concrete decks or on projects where the existing roofing material is left in place, leaks may result from moisture entrapment in the original installation.

On poorly insulated roofing assemblies, leaks may occur as the result of condensation. It is therefore important to determine the leak location and frequency. Sources of air leakage should be sealed if possible.

1. Begin leak investigations by conducting a thorough visual inspection of the general location on the roof where leaks have been detected inside the building.
2. Inspect detail areas such as drains, vents, scuppers, HVAC and other roof-mounted equipment, parapets, ponded water areas, etc. If the roof is dry at the time of investigation, areas where water ponds can be identified by evidence of accumulated residue on roof membrane.
3. Examine lower areas of the roof for moisture beneath the liquid-applied roofing (soft insulation can be detected when walking over the roof).
4. Check areas around mechanical rooftop equipment, drains, skylights, roof hatches, expansion joints, pipes, vents, etc. to identify cuts or punctures in the liquid-applied roofing.
5. Examine the condition of metal flashings (i.e., edging, coping, expansion joint covers, parapet caps, etc.) for cracks and improperly sealed joints.
6. When a visible source of the leak has not been identified, wet the system at the anticipated leak area with water and examine the interior area for leaks.
7. Often, an inspection of the underside of the deck will reveal signs of water leakage and/or air infiltration.

EMERGENCY REPAIRS

GAF must be notified of any leaks within 30 days of discovery of a leak or GAF will have no responsibility for making repairs or replacing that portion of the products that leak as a result of a manufacturing defect. The Building Owner may make temporary repairs to minimize damage to the building or its contents in an emergency. Only qualified workers should perform temporary repairs. These repairs will not result in cancellation of the applicable guarantee or warranty as long as they are reasonable and customary and do not result in permanent damage to the GAF roofing materials. When weather conditions permit, permanent repairs should be completed by an approved GAF contractor at GAF's direction if it is a covered leak or at the building owner's direction for non-covered leaks.

Repairs should not be made with asphalt-based products unless a wet patch type product is needed for emergency purposes. If wet patch products are used they must be completely removed at the time permanent repairs are made.

Temporary Dry Surface Emergency Repairs

- Clean the roof surface around the damaged area using Cleaning Concentrate.
- Rinse the area with clean water and allow it to dry.
- Alternately, if area is small, it may be cleaned by wiping with a rag and approved solvent (Xylene, Mineral Spirit, etc.).
- For roofs with acrylic coating, apply Premium Brush-Grade Acrylic Flashing and embed Premium Fabric as needed to provide additional strength. For roofs with urethane or SEBS coating, apply FlexSeal Flashing and embed Premium Fabric as needed to provide additional strength. Finally, for roofs with silicone coating, apply Silicone Mastic and embed Premium Fabric as needed to provide additional strength. Contact GAF Design Services before any other product is used to confirm its suitability.

Specific Repairs to Liquid-Applied Roofing over Spray Polyurethane Foam (SPF) Insulation

- Minor breaks in the liquid-applied roofing or mechanical damage to sprayed polyurethane foam (SPF) may be repaired with approved urethane caulk and then top-coated with Premium Brush-Grade Acrylic Flashing and fabric. The damaged foam must be completely cut away prior to repairing. If the repaired area is larger than 2" (51 mm) in diameter, consult GAF Design Services for proper repair procedures. Note: If silicone is used for repair, the area must be filled with Silicone Mastic Grade.
- Large blisters that are not leaking but have broken open should be removed and repaired. If the blister has not broken open, GAF recommends leaving it in place.

Specific Repairs to Liquid-Applied Roofing Not Over Spray Polyurethane Foam (SPF) Insulation

- Repair minor mechanical damage to the liquid-applied roofing with specified flashing grade and/or approved urethane caulk, and then top-coat with an approved GAF product. The damaged liquid-applied roofing must be completely cut away prior to repairing. If the repaired area is larger than 2" (51 mm) in diameter, consult GAF Design Services for proper repair procedures.
- If the liquid-applied roofing incorporates reinforcement fabric, then the repair should use specified flashing grade product and fabric.
- For guidelines regarding the use of Unisil applications on acrylic-coated roofs with poor drainage, refer to GAF Technical Advisory Bulletin TAB-C-47.

ROOF ALTERATIONS

General

GAF must be notified of any planned roof alterations prior to such alterations being made. Coverage under the guarantee or warranty may be jeopardized if:

- GAF is not notified of alterations.
- The original contractor of record (or another GAF-certified contractor) does not do the required work.
- Non-GAF products are used.

All alterations must be pre-approved, including but not limited to modifications such as roof-top HVAC units or other equipment, pipes, satellite dishes, antennas, conduit, general penetrations, skylights, etc.

NOTE: These maintenance and inspection procedures are provided for guidance purposes only. An approved GAF-certified contractor or professional roof consultant may provide a more detailed maintenance program. Maintain records of roof damage and maintenance inspections for each building roof.

SECTION 5
Architectural Detail Drawings

ARCHITECTURAL DETAIL DRAWINGS DIRECTORY: 3-COURSED DETAILS

Spec Number	Detail Name	Page #
LAR-101	Seam Flashing – Ribbed Panels	100
LAR-102	Seam Flashing – Corrugated Panels	101
LAR-103	Seam Flashing – Standing Seam Panels	102
LAR-104	Seam Flashing – J Panels	103
LAR-105	Seam Flashing – Ribbed J-Panels	104
LAR-106	Ridge Cap (Elevated)	105
LAR-201	Metal Roof Edge Fascia Cap	106
LAR-301	Wall Flashing- Over Non Metal Systems	107
LAR-302	General Equipment Curb Flashing	108
LAR-303	Skylight Curb	109
LAR-304	HVAC Curb/Scuttle Hatch Flashing	110
LAR-401	Control Joint - Concrete Deck	111
LAR-501	Pipe Flashing - Over Sprayed Polyurethane Foam	112
LAR-502	Pipe Flashing	113
LAR-503	Double Penetration	114
LAR-504	Fabric Reinforced Drain	115
LAR-505	New Installation Drain Sump Flashing - Over Sprayed Polyurethane Foam	116
LAR-506	Flush Skylight	117

GAF Liquid-Applied Roofing

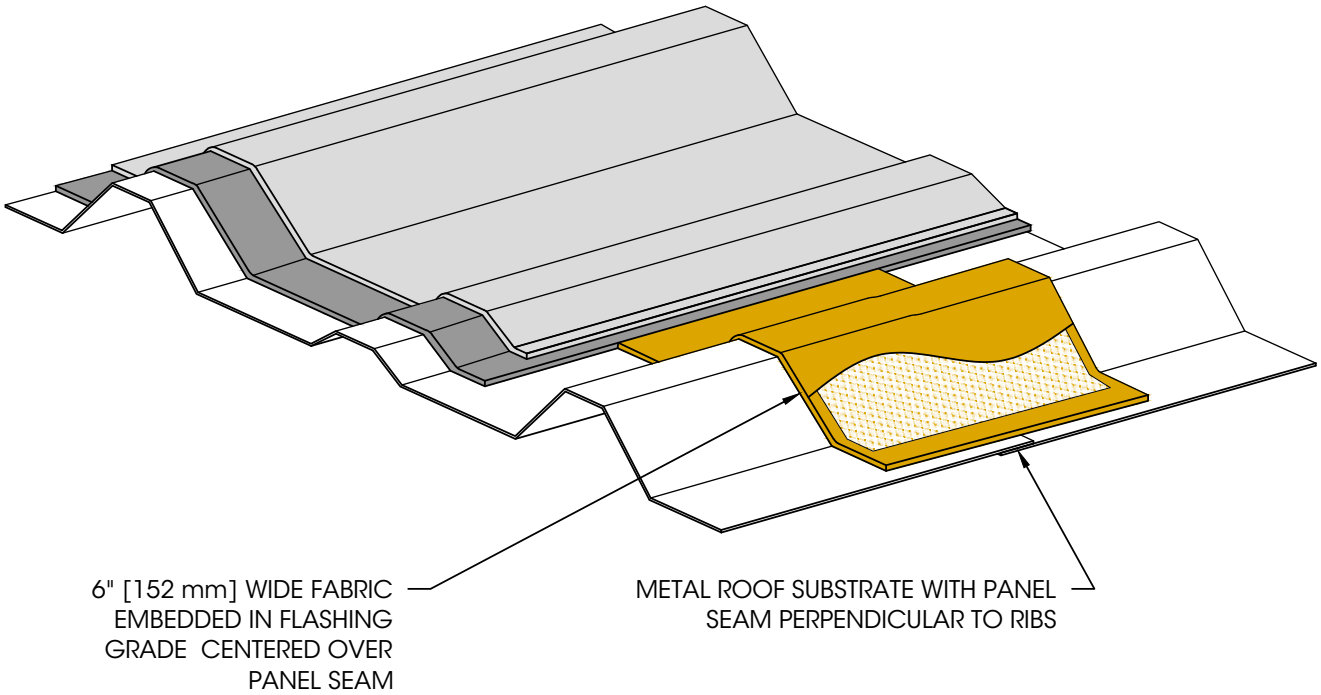

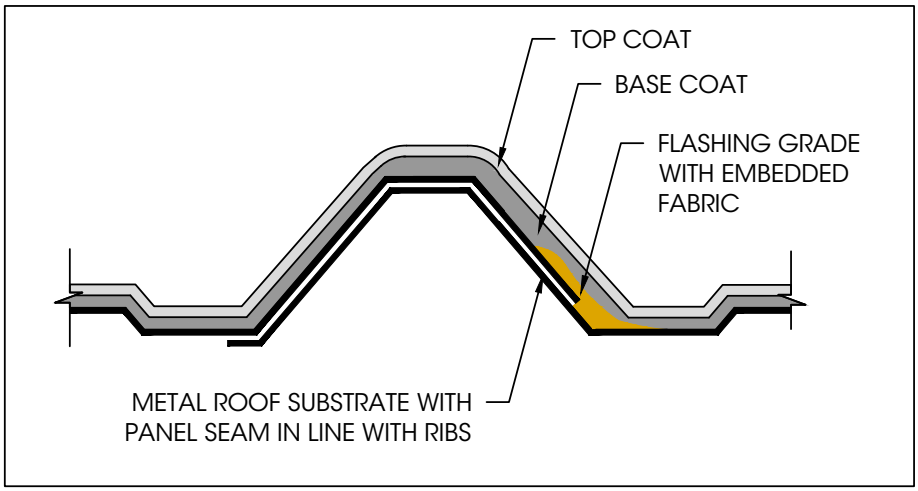

Notes:

1. Refer to specific coating system for base coat and top coat products.
2. For seam treatment, refer to seam treatment guide.
3. 12" (305 mm) required at perimeter and transition seam.

LEGEND	Seam Flashing - Ribbed Panels	Roof Area: Field of Roof		Detail No:
Top coat Base coat Flashing Grade		Issue Date: 6/13/23	Scale: N.T.S.	101

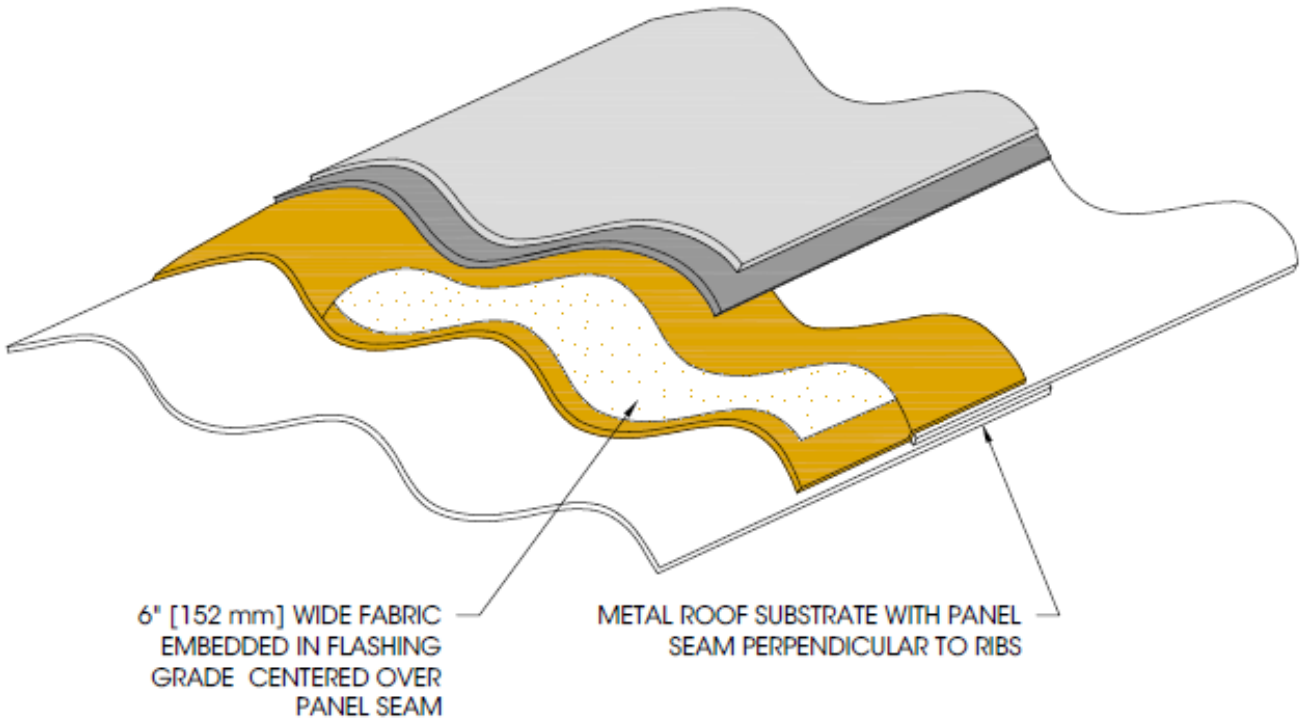

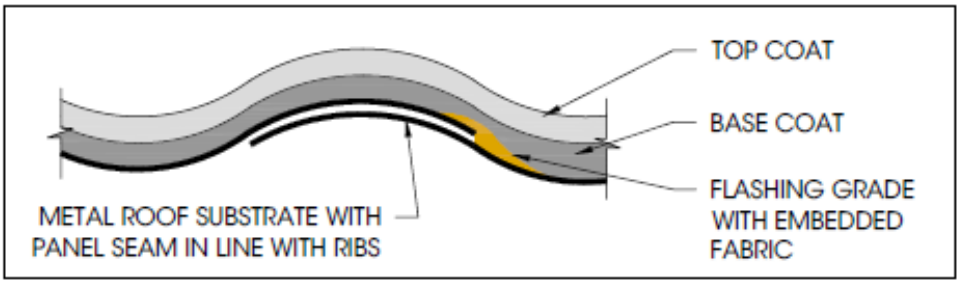

Notes:

1. Refer to specific coating system for base coat and top coat products.
2. For seam treatment, refer to seam treatment guide.
3. 12" (305 mm) required at perimeter and transition seam.

LEGEND	Seam Flashing - Corrugated Panels	Roof Area: Field of Roof		Detail No:
Top coat Base coat Flashing Grade		Issue Date: 6/13/23	Scale: N.T.S.	102

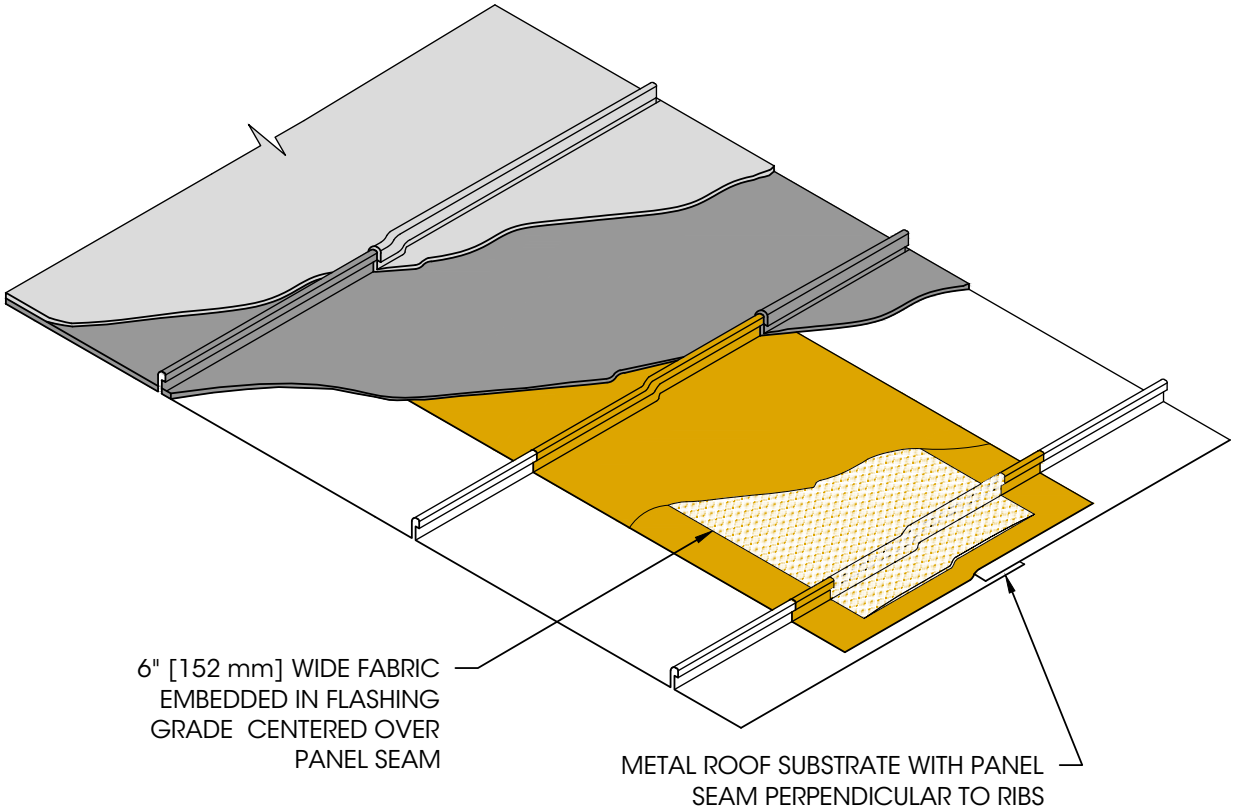

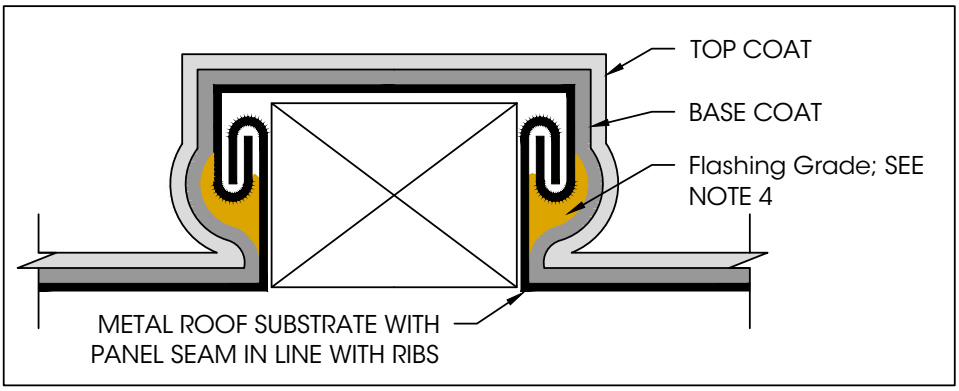

Notes:

1. Refer to specific coating system for base coat and top coat products.
2. For seam treatment, refer to seam treatment guide.
3. 12" (305 mm) required at perimeter and transition seam.
4. Vertical seams may forgo flashing grade treatment if the seal/tape is intact on the seam or if they are double locked.

LEGEND	Seam Flashing - Standing Seam Panels	Roof Area: Field of Roof		Detail No:
Top coat Base coat Flashing Grade		Issue Date: 6/13/23	Scale: N.T.S.	103

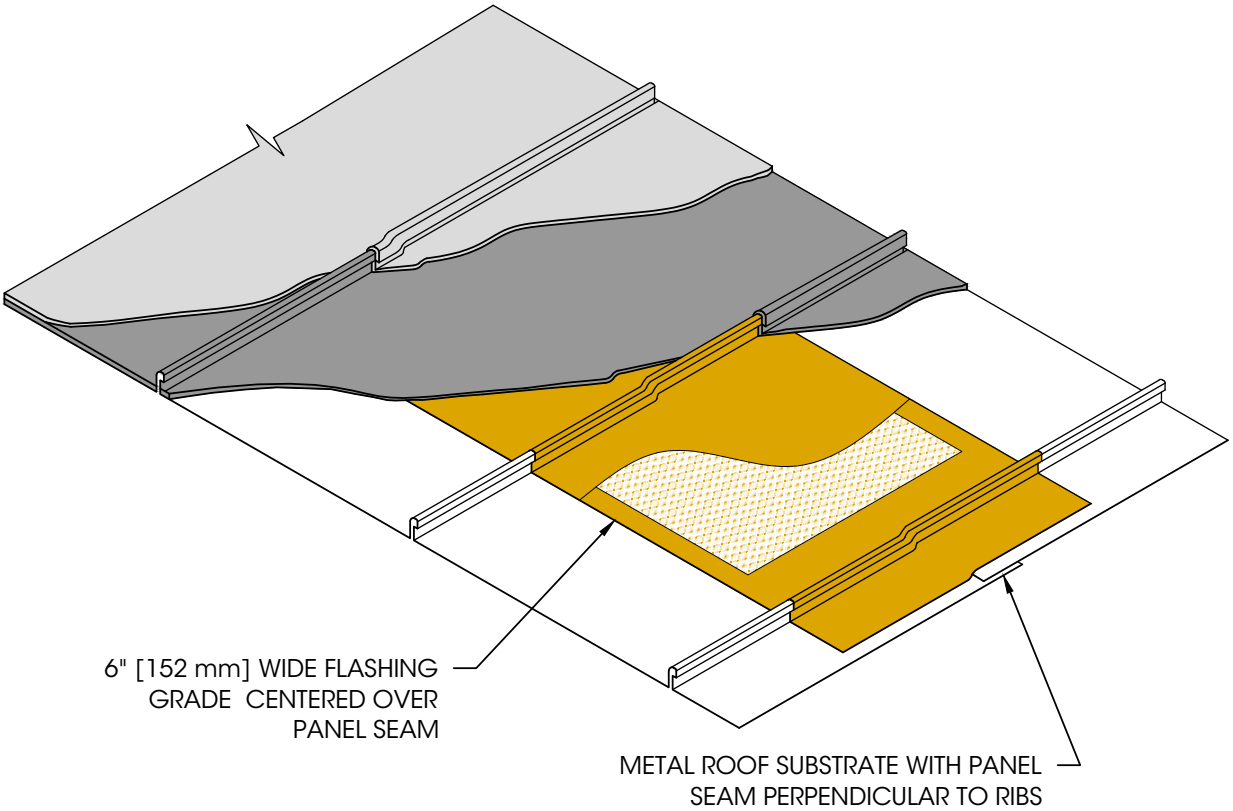

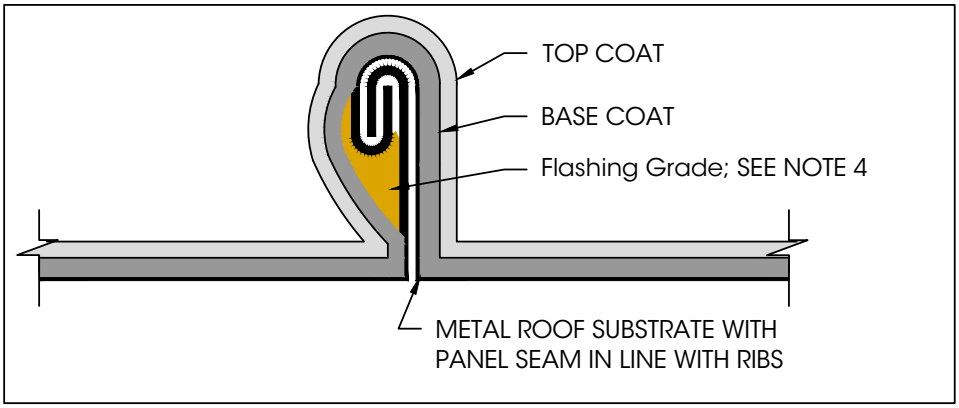

Notes:

1. Refer to specific coating system for base coat and top coat products.
2. For seam treatment, refer to seam treatment guide.
3. 12" (305 mm) required at perimeter and transition seam.
4. Vertical seams may forgo flashing grade treatment if the seal/tape is intact on the seam or if they are double locked.

LEGEND	Seam Flashing - "J" Panels	Roof Area: Field of Roof		Detail No:
Top coat Base coat Flashing Grade		Issue Date: 6/13/23	Scale: N.T.S.	104

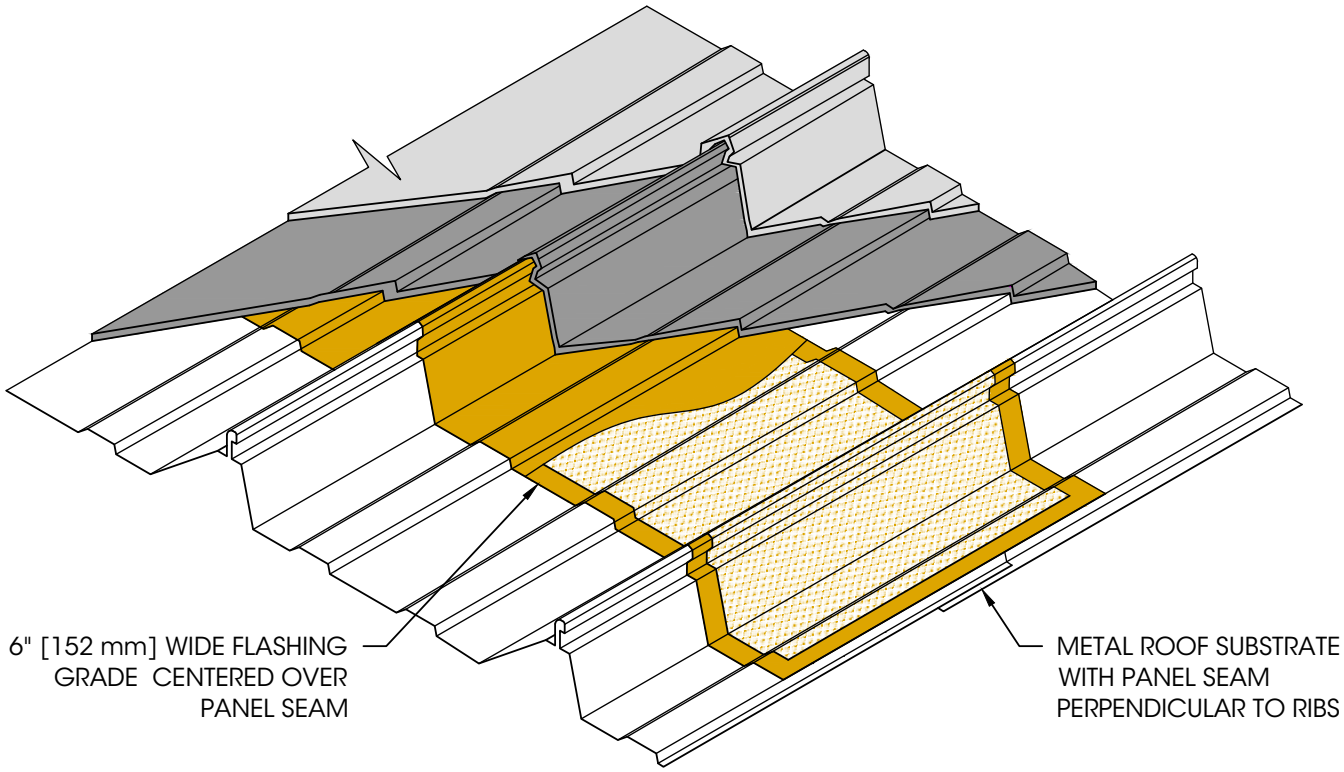

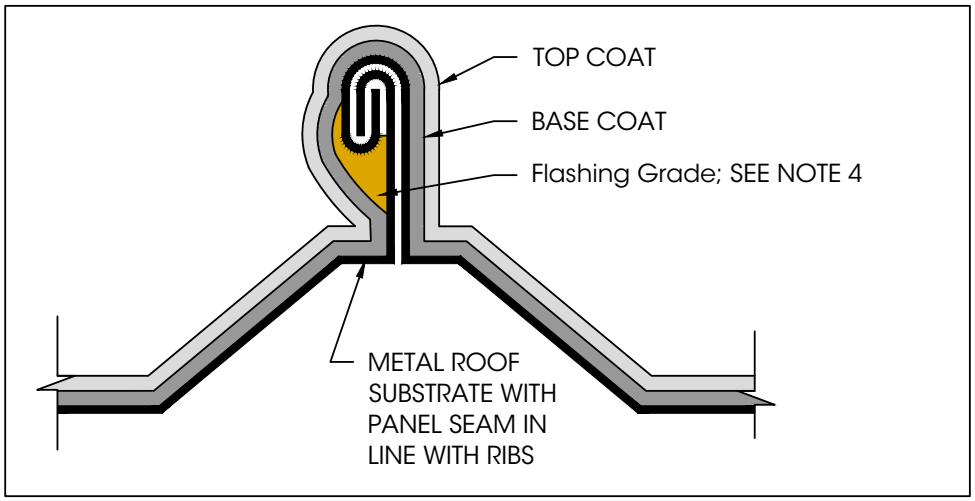

Notes:

1. Refer to specific coating system for base coat and top coat products.
2. For seam treatment, refer to seam treatment guide.
3. 12" (305 mm) required at perimeter and transition seam.
4. Vertical seams may forgo flashing grade treatment if the seal/tape is intact on the seam or if they are double locked.

LEGEND	Seam Flashing - Ribbed "J" (Trapezoidal) Panels	Roof Area: Field of Roof		Detail No:
Top coat Base coat Flashing Grade		Issue Date: 6/13/23	Scale: N.T.S.	105

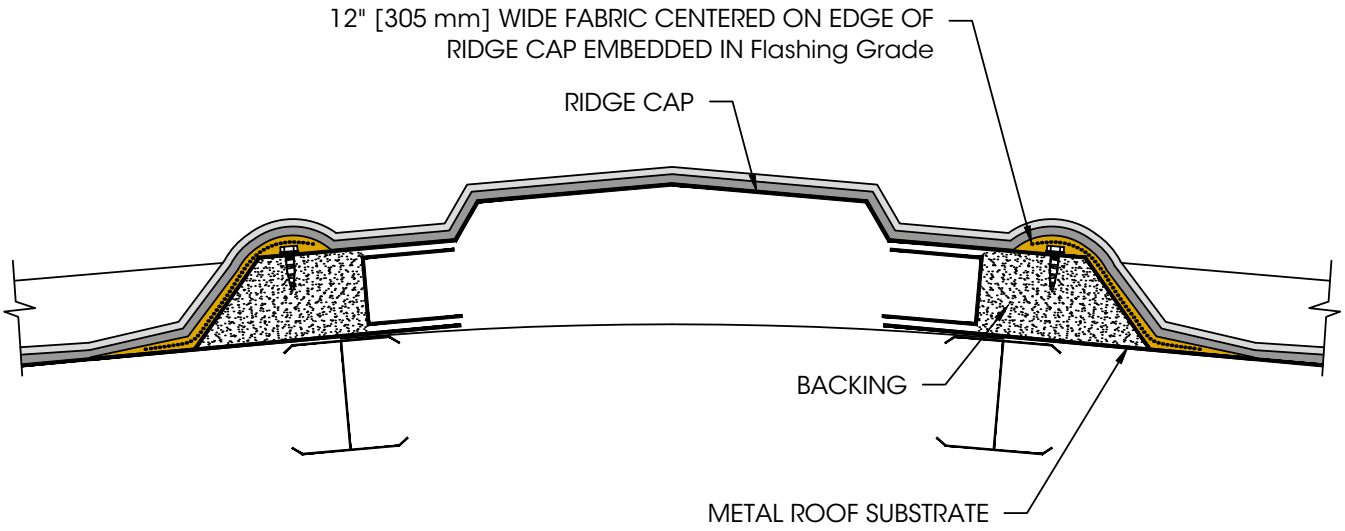

Notes:

1. Refer to specific coating system for base coat and top coat products.
2. For seam treatment, refer to seam treatment guide.

LEGEND	Ridge Cap Flashing	Roof Area: Field of Roof		Detail No:
Top coat				106
Base coat		Issue Date: 6/13/23	Scale: N.T.S.	
Flashing Grade				

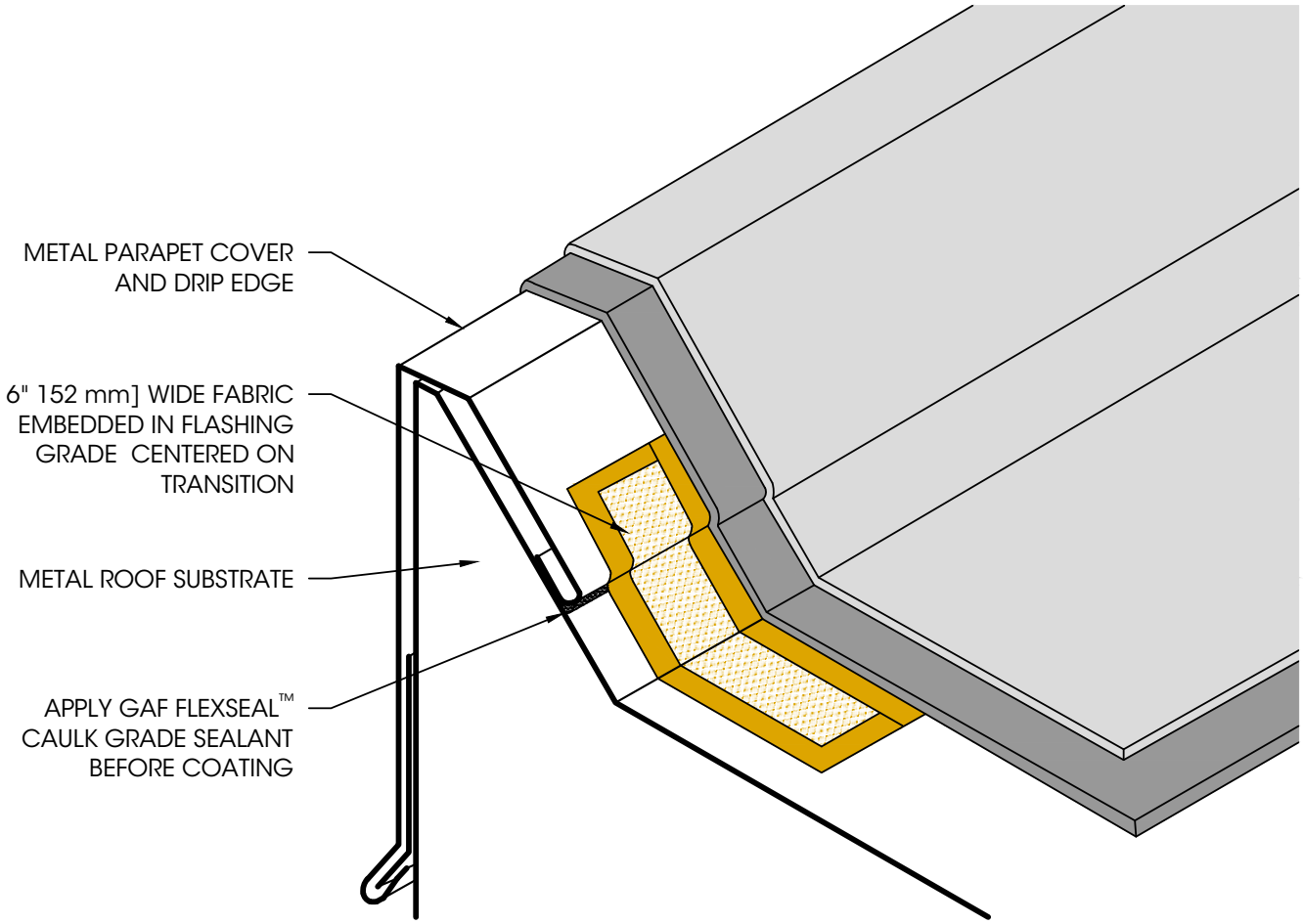

Notes:

1. Refer to specific coating system for base coat and top coat products.

LEGEND	Metal Roof Edge Fascia Cap Flashing	Roof Area: Roof Edge		Detail No:
Top coat		Issue Date: 6/13/23	Scale: N.T.S.	201
Base coat				
Flashing Grade				

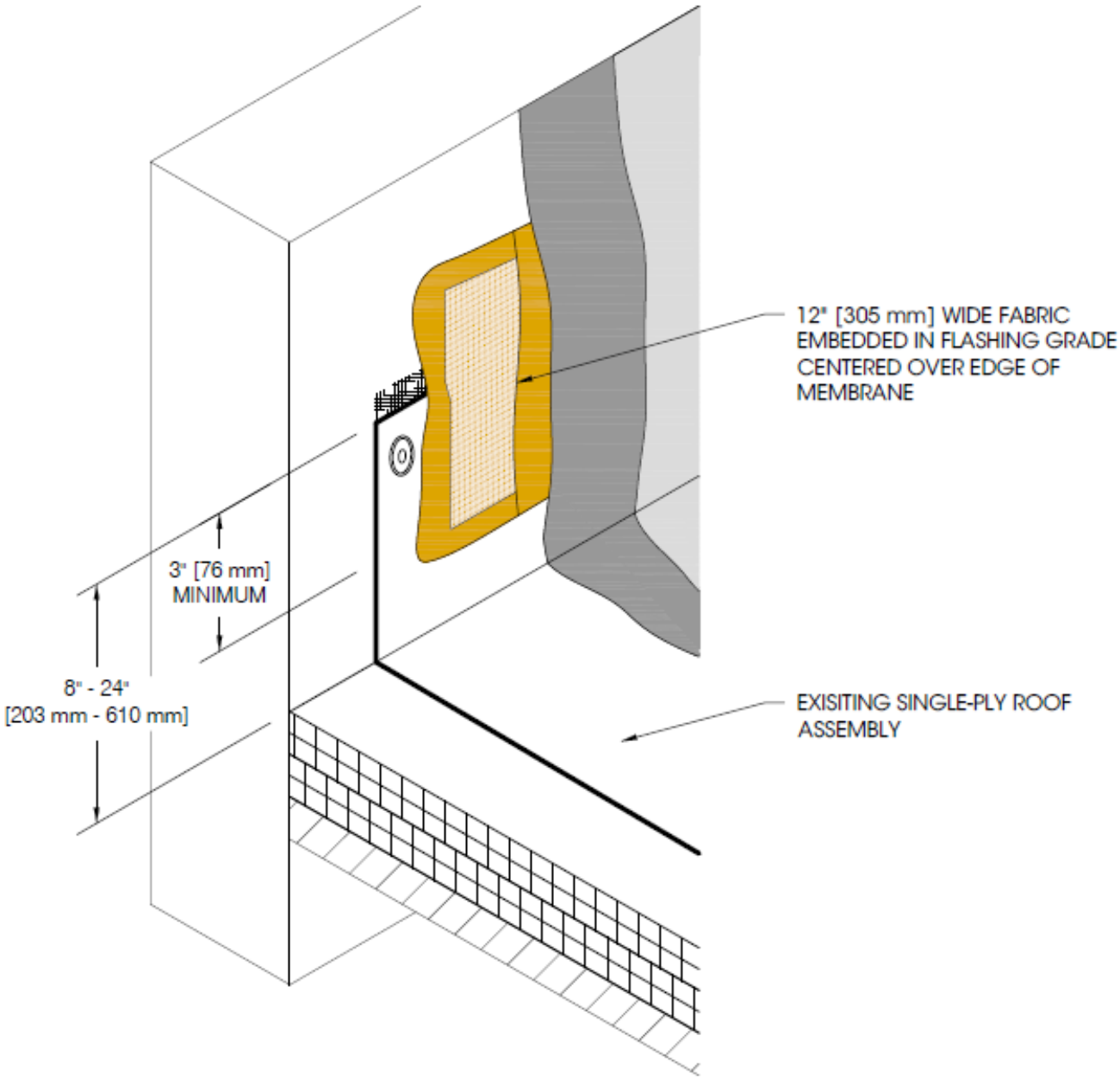

Notes:

1. Refer to specific coating system for base coat and top coat products.
2. Remove counterflashing prior to detail application.

LEGEND	Wall Flashing Over Non-metal Roof System	Roof Area: Wall & Curb		Detail No:
Top coat Base coat Flashing Grade		Issue Date: 6/13/23	Scale: N.T.S.	301

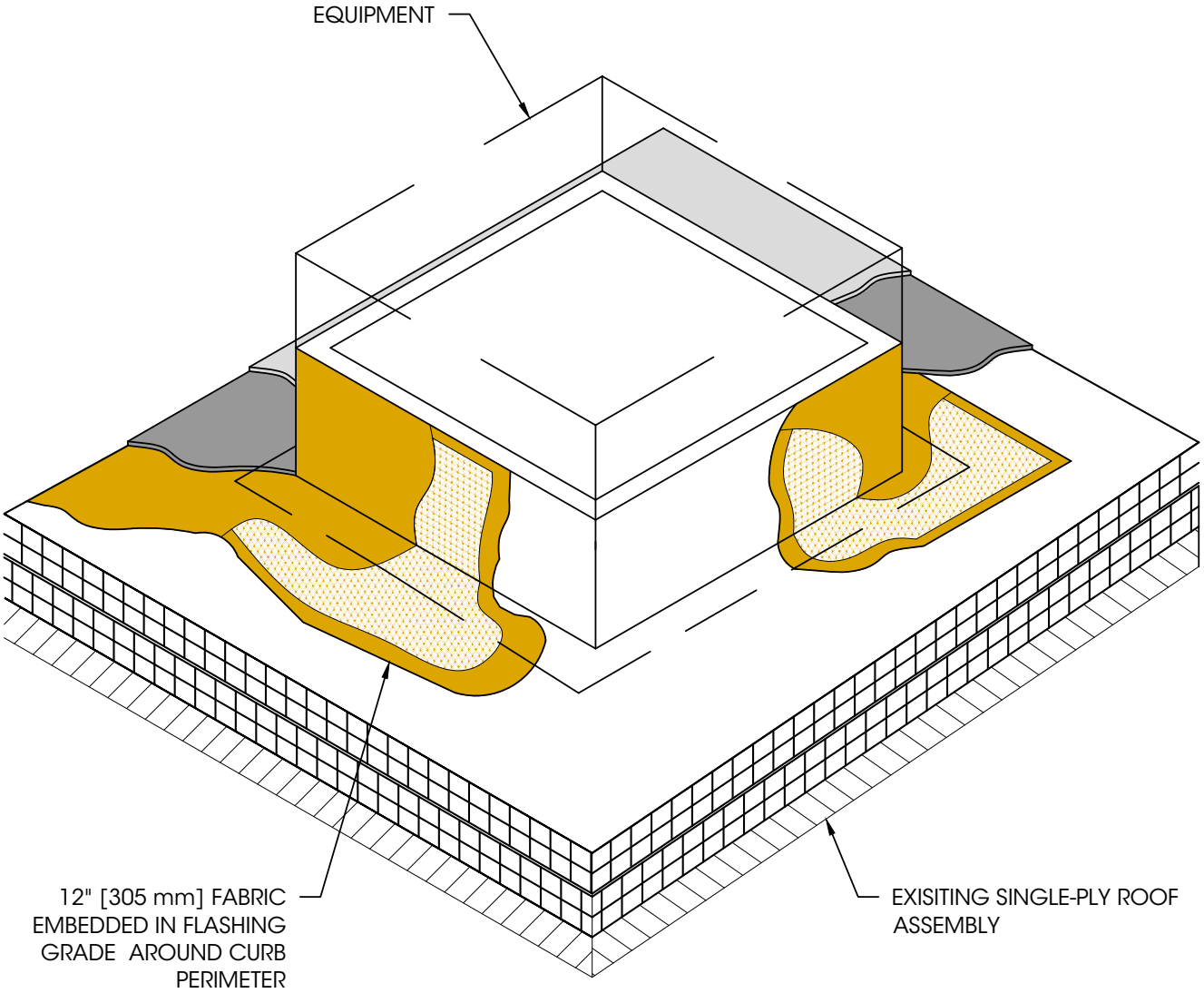

Notes:

1. Refer to specific coating system for base coat and top coat products.
2. New crickets shall be "sealed" by placing a bead of flashing grade under the flanges before they are mechanically attached.

LEGEND	Equipment Curb Flashing	Roof Area: Wall & Curb		Detail No:
Top coat Base coat Flashing Grade		Issue Date: 6/13/23	Scale: N.T.S.	302

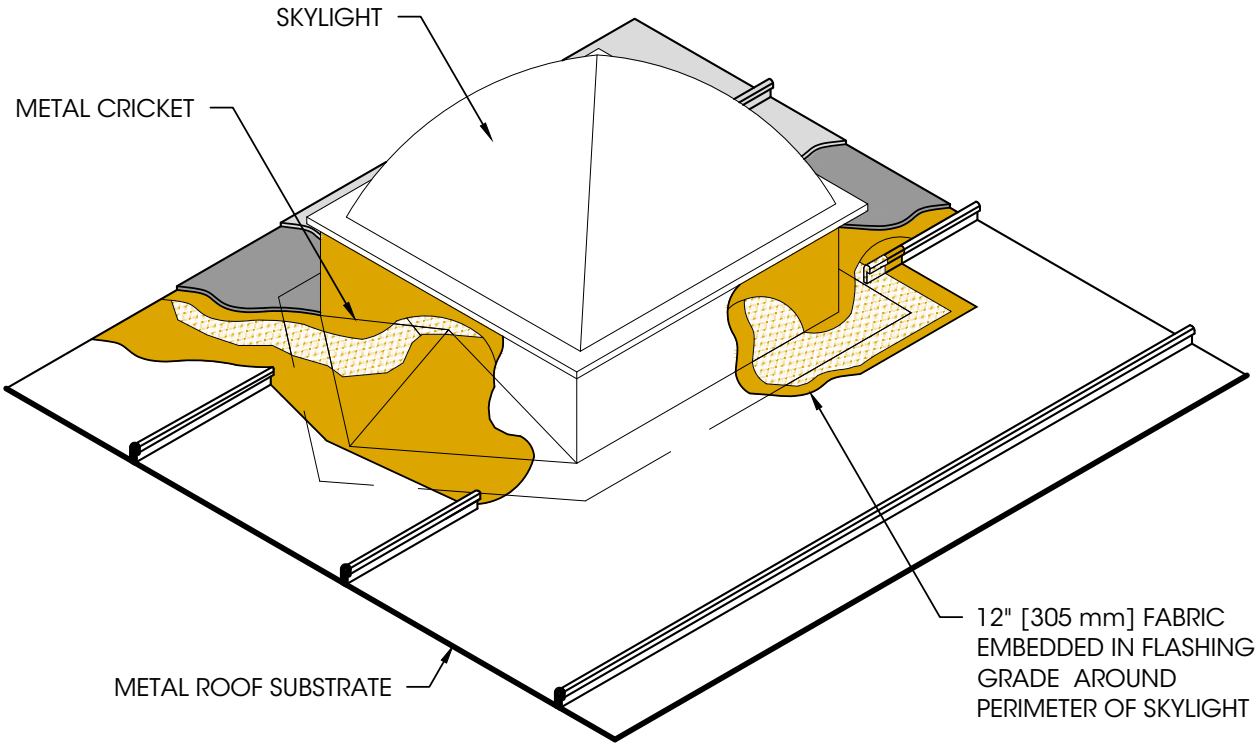

Notes:

1. Refer to specific coating system for base coat and top coat products.
2. New crickets shall be "sealed" by placing a bead of flashing grade under the flanges before they are mechanically attached.

LEGEND	Skylight Curb Flashing	Roof Area: Wall & Curb		Detail No:
Top coat		Issue Date: 6/13/23	Scale: N.T.S.	303
Base coat				
Flashing Grade				

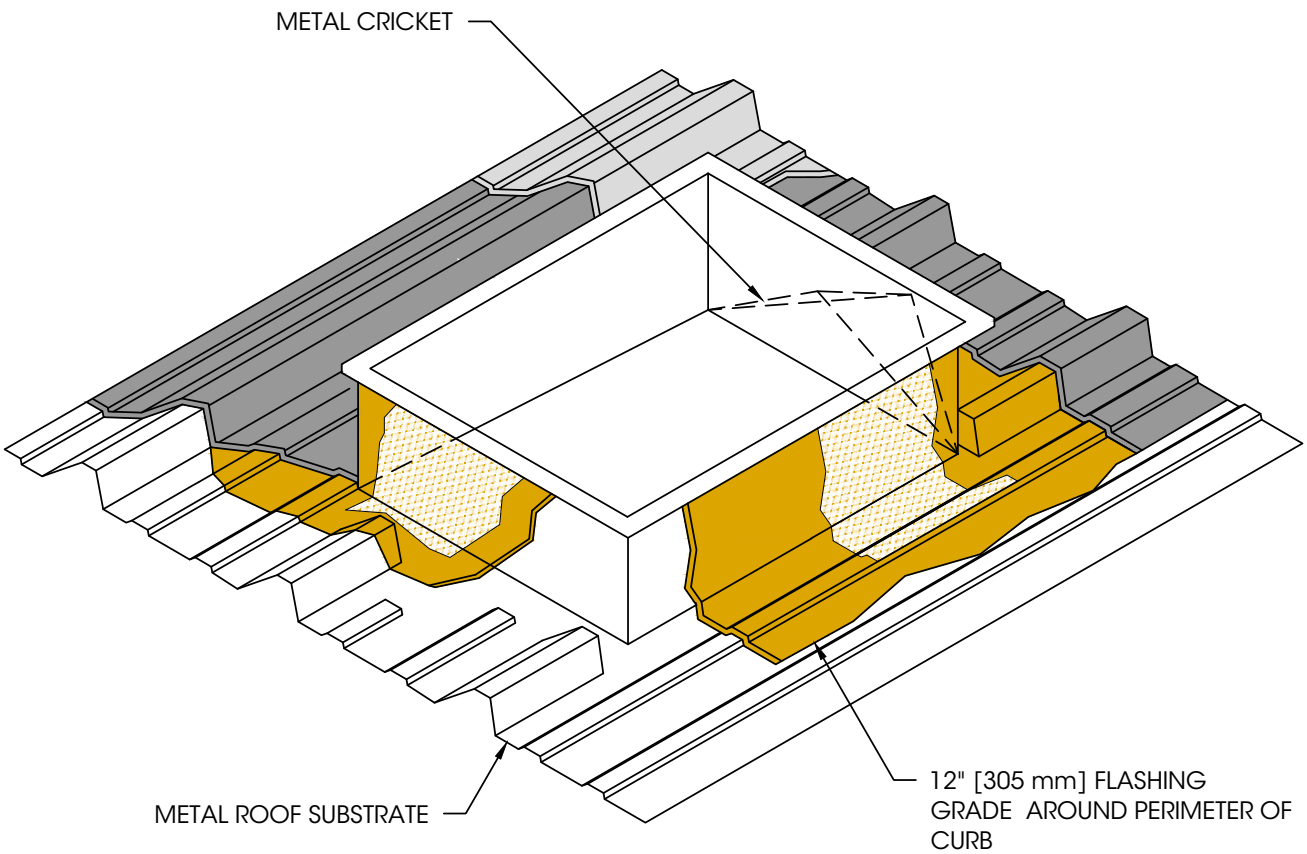

Notes:

1. Refer to specific coating system for base coat and top coat products.
2. New crickets shall be "sealed" by placing a bead of flashing grade under the flanges before they are mechanically attached.

LEGEND	HVAC Curb / Scuttle Hatch Flashing	Roof Area: Wall & Curb		Detail No:
Top coat Base coat Flashing Grade		Issue Date: 6/13/23	Scale: N.T.S.	304

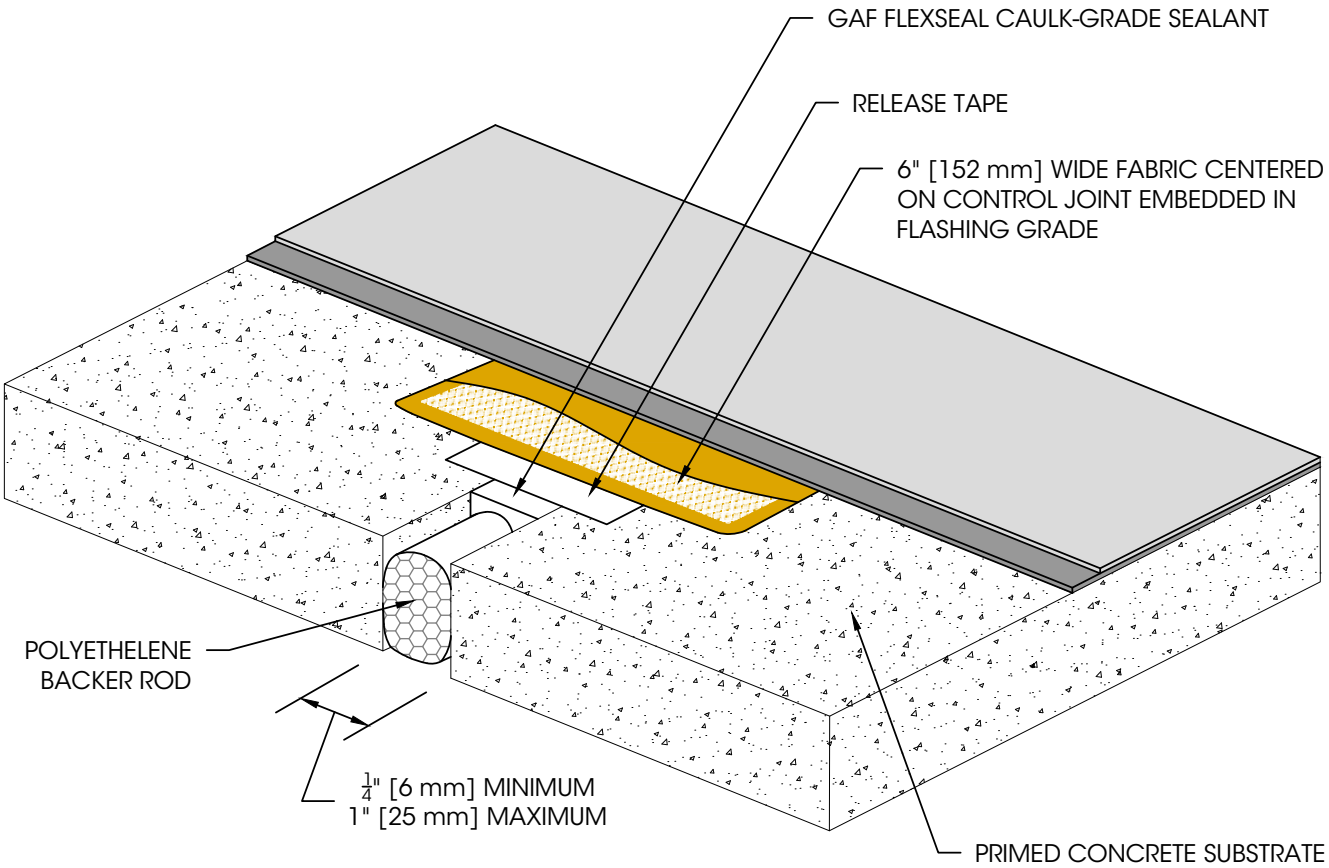

Notes:

1. Refer to specific coating system for base coat and top coat products.

LEGEND	Flashing at Concrete Deck Control Joint	Roof Area: Expansion Joints		Detail No:
Top coat		Issue Date: 6/13/23	Scale: N.T.S.	401
Base coat				
Flashing Grade				

GAF Liquid-Applied Roofing

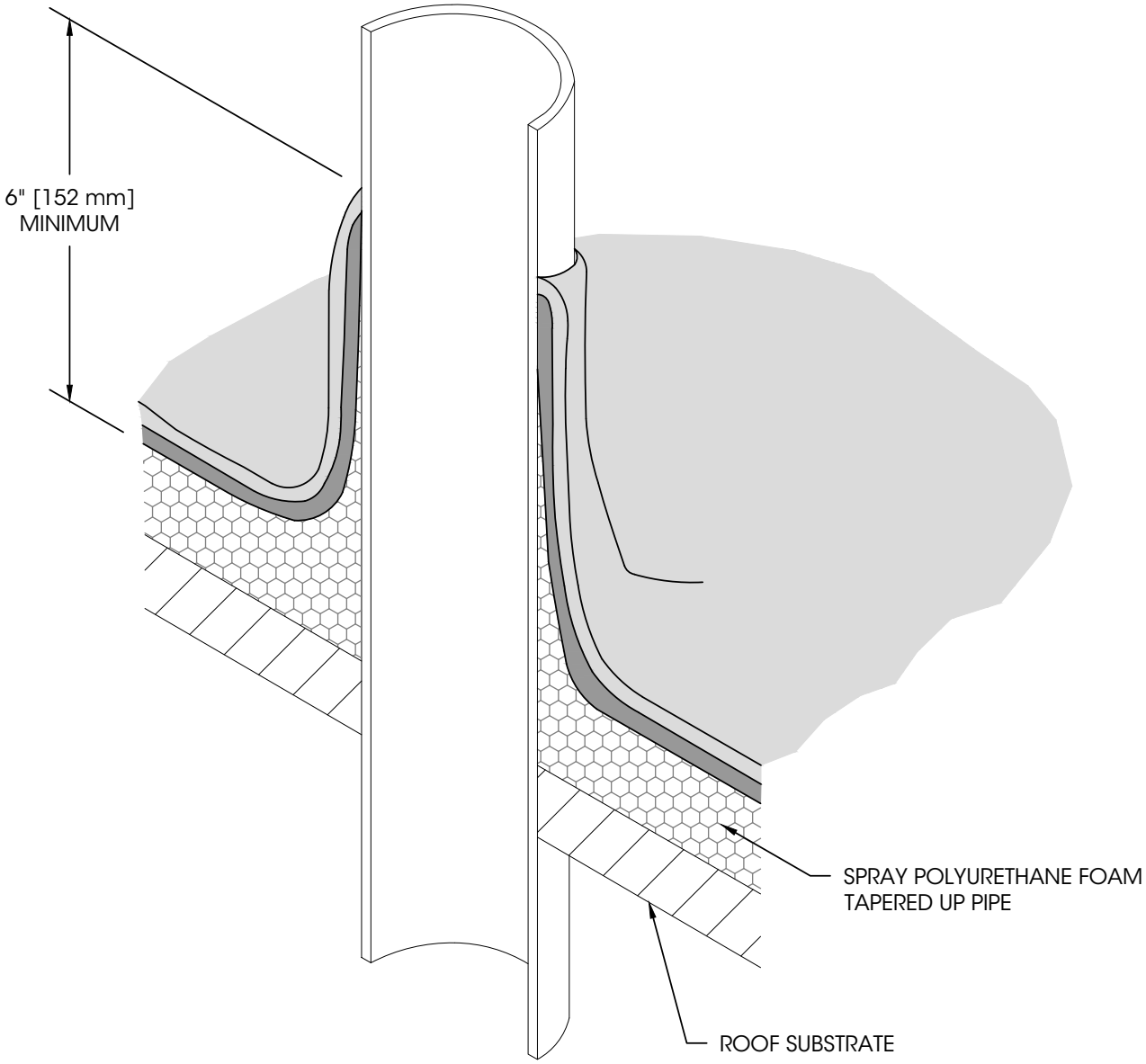

Notes:

1. Refer to specific coating system for base coat and top coat products.

LEGEND	Pipe Flashing Over Spray Polyurethane Foam	Roof Area: Penetrations		Detail No:
Top coat Base coat		Issue Date: 6/13/23	Scale: N.T.S.	501

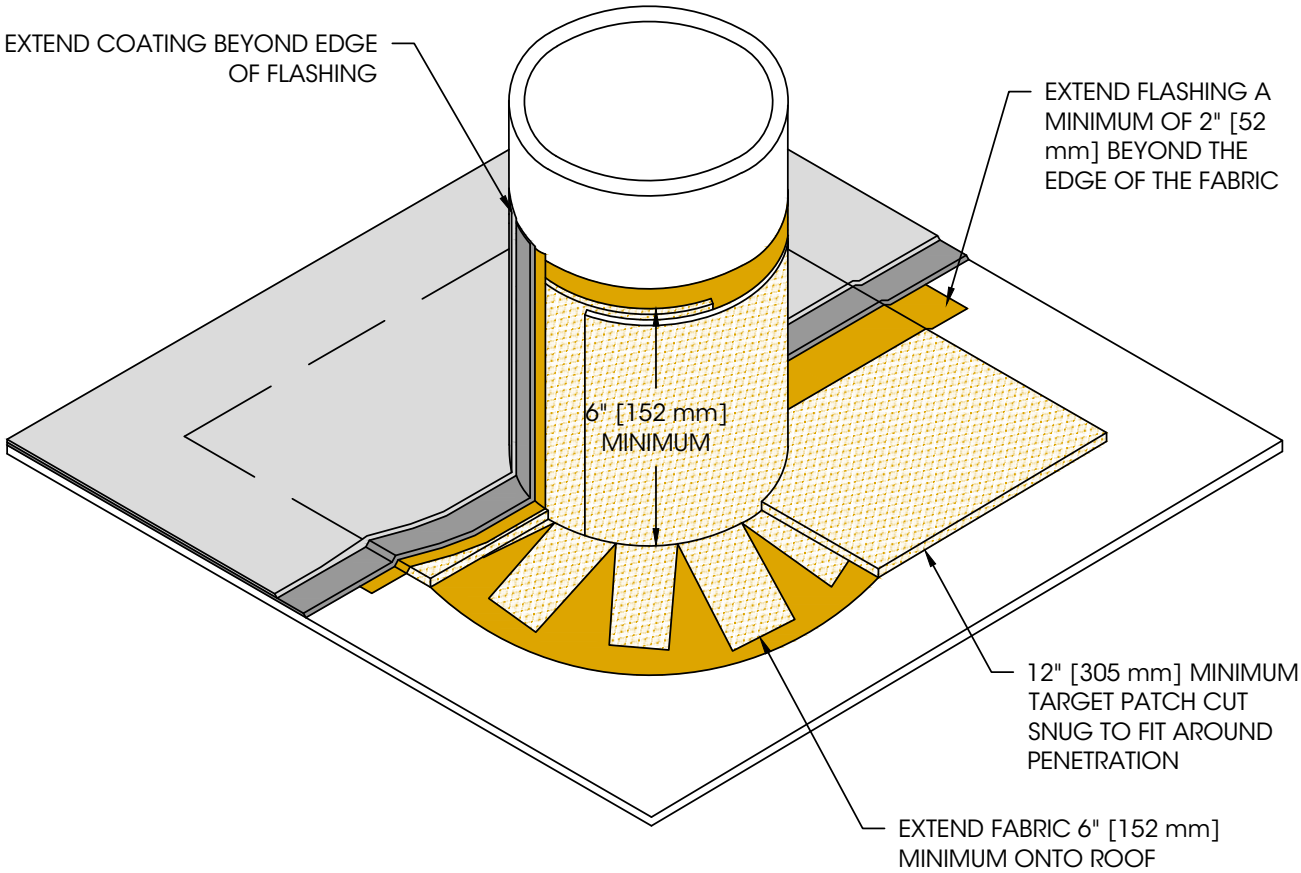

Notes:

1. Refer to specific coating system for base coat and top coat products.

LEGEND	Pipe Flashing	Roof Area: Penetrations		Detail No:
Top coat		Issue Date: 6/13/23	Scale: N.T.S.	502
Base coat				
Flashing Grade				

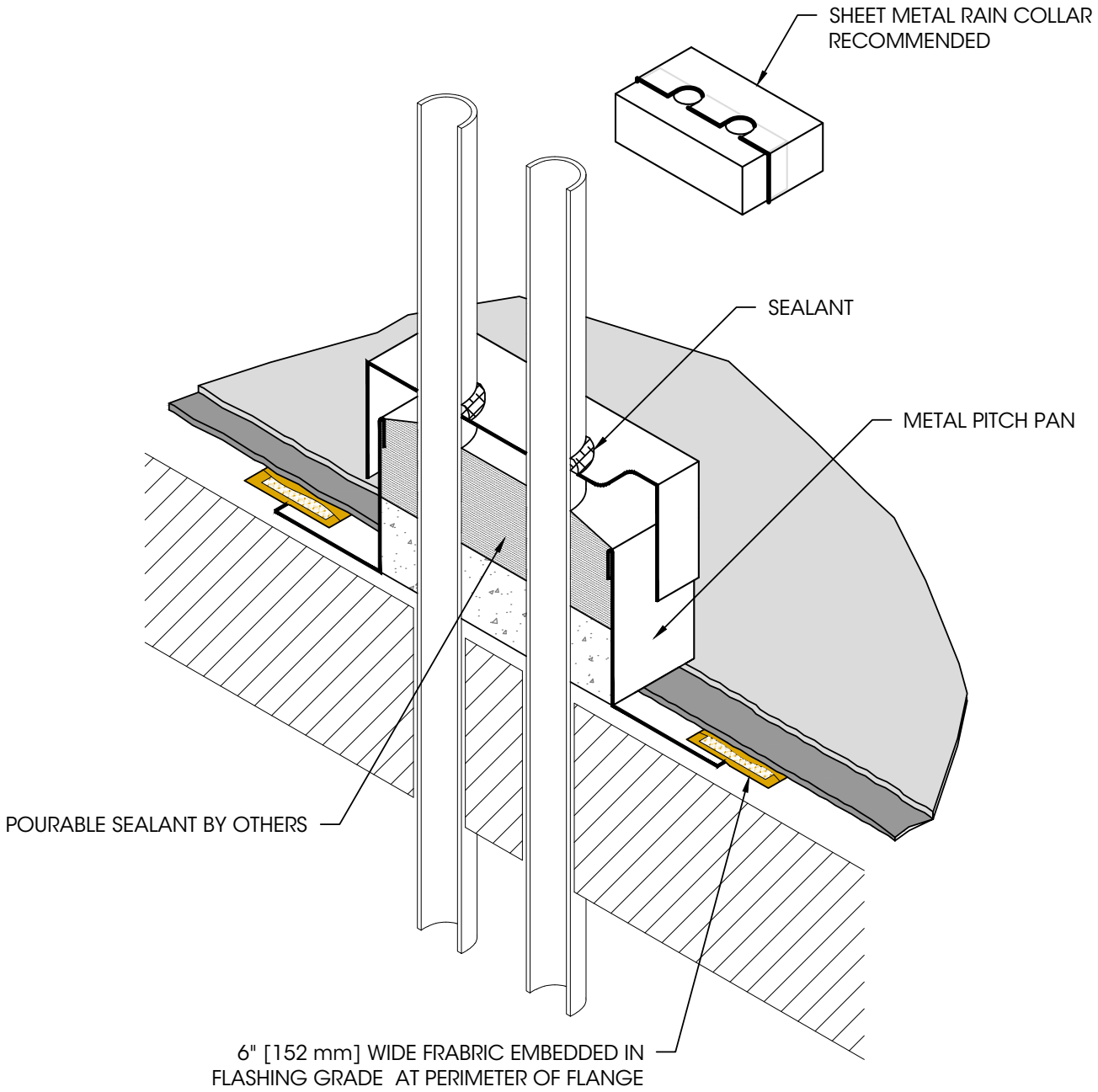

Notes:

1. Refer to specific coating system for base coat and top coat products.
2. For tight-fitting penetrations only. Loose-fitting penetrations require fabric; See coating details.

LEGEND	Penetration Pocket - Double Penetration	Roof Area: Penetrations		Detail No:
Top coat Base coat Flashing Grade		Issue Date: 6/13/23	Scale: N.T.S.	503

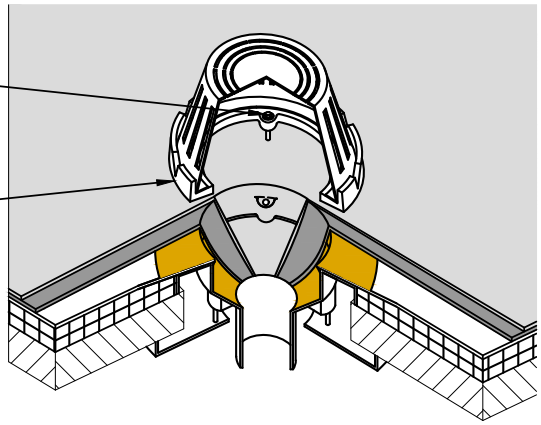

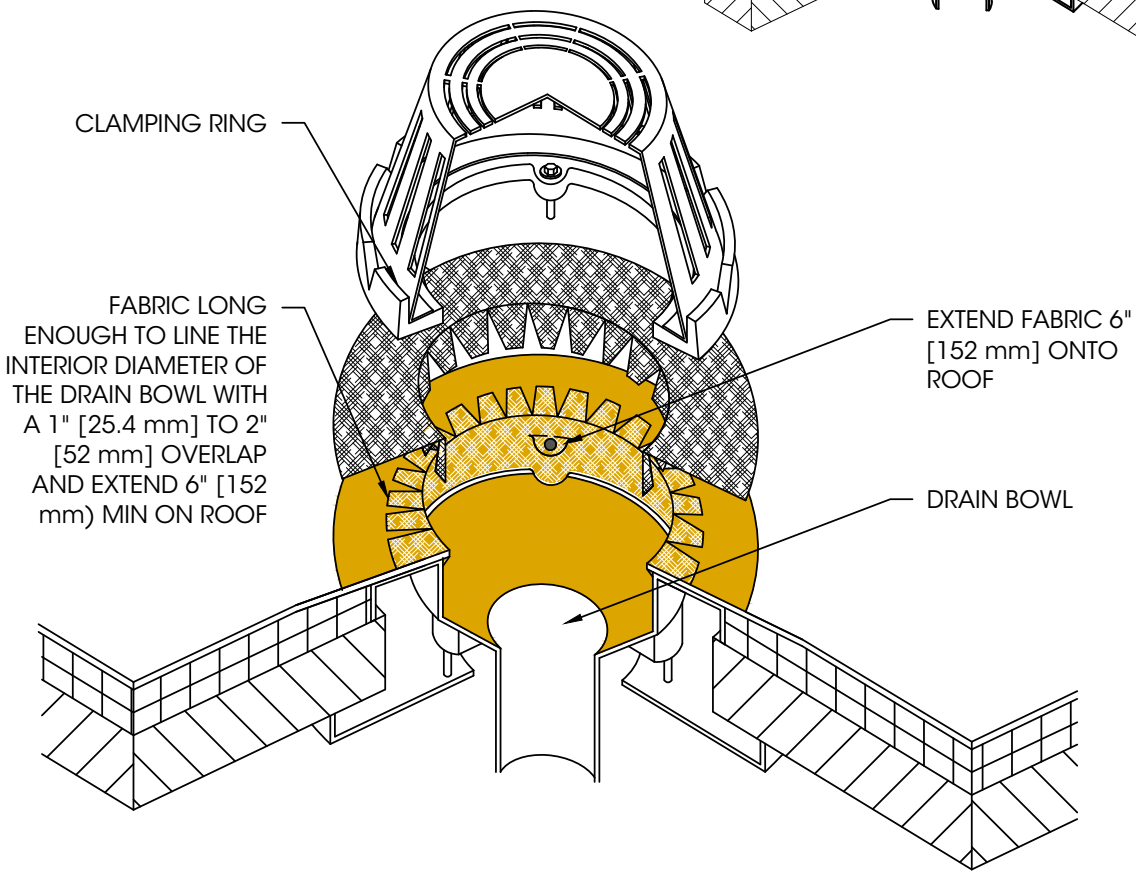

Notes:

1. Refer to specific coating system for base coat and top coat products.

LEGEND	Standard Drain Flashing	Roof Area: Penetrations		Detail No:
Top coat Base coat Flashing Grade		Issue Date: 6/13/23	Scale: N.T.S.	504

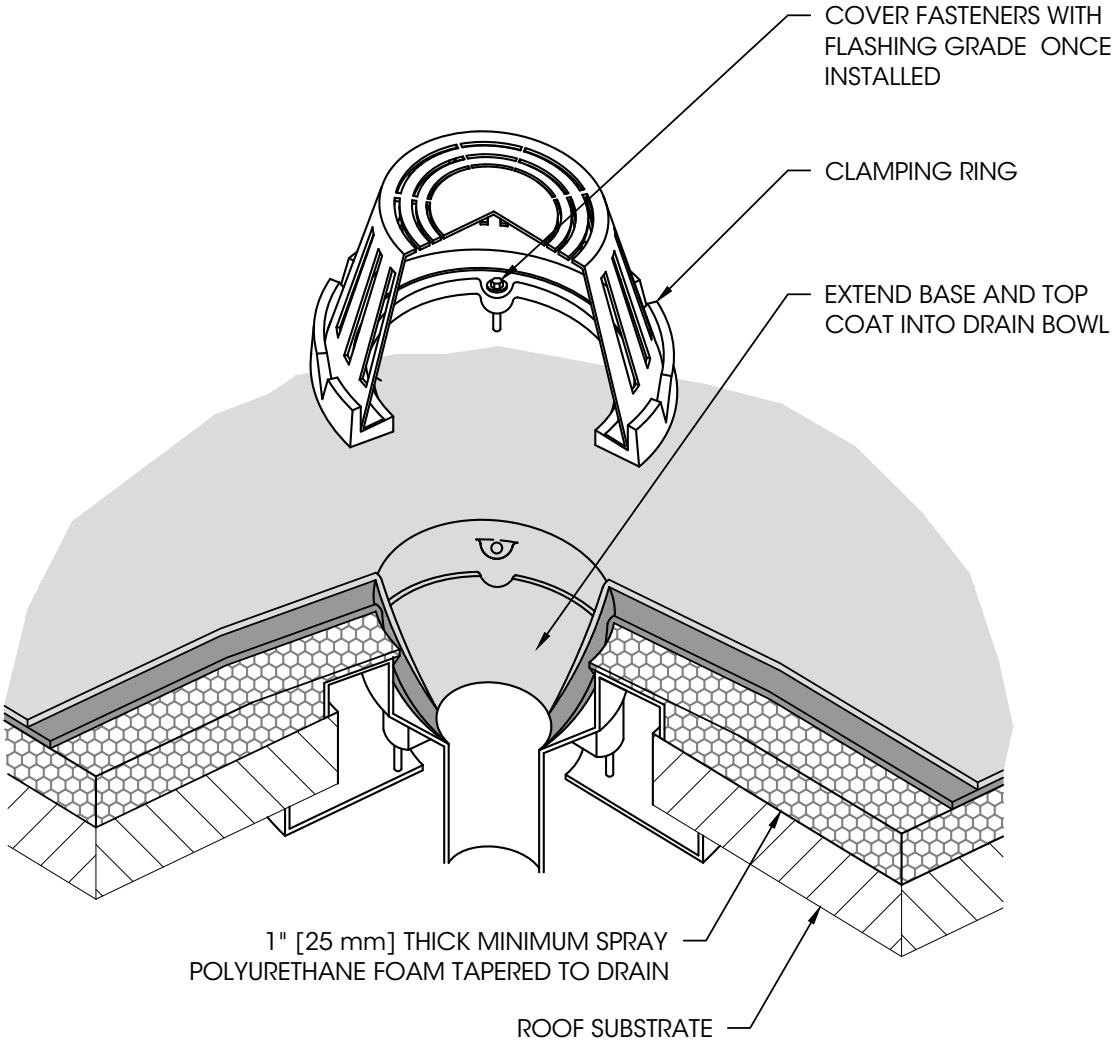

Notes:

1. Refer to specific coating system for base coat and top coat products.
2. Affix drain strainer to top coat with compatible sealant.

LEGEND	Drain Flashing Over Spray Polyurethane Foam	Roof Area: Penetrations		Detail No:
Top coat Base coat		Issue Date: 6/13/23	Scale: N.T.S.	505

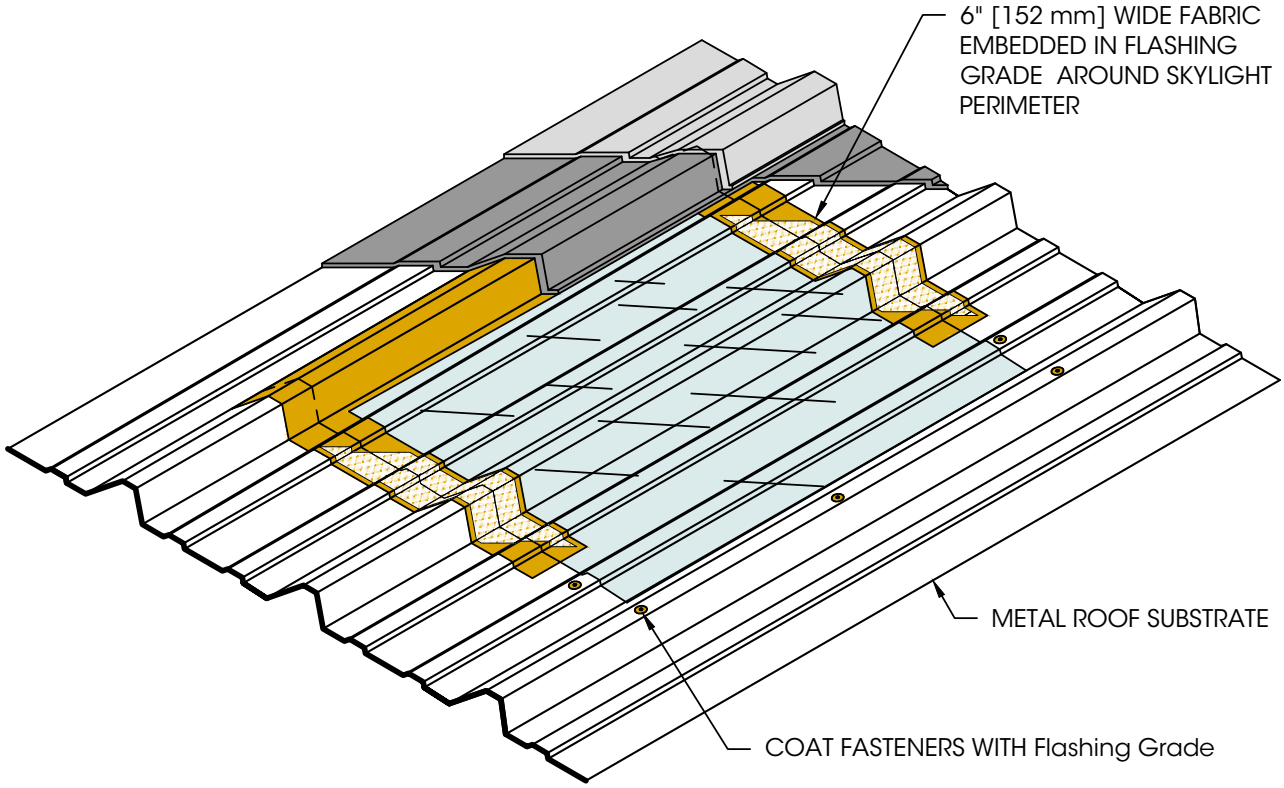

Notes:

1. Refer to specific coating system for base coat and top coat products.
2. Do not use coatings to cover skylights.

LEGEND	Flush Skylight Flashing	Roof Area: Penetrations		Detail No:
Top coat		Issue Date: 6/13/23	Scale: N.T.S.	506
Base coat				
Flashing Grade				

ARCHITECTURAL DETAIL DRAWINGS DIRECTORY: SILICONE (UNREINFORCED)_

Spec Number	Detail Name	Page #
LAR-101	Seam Flashing – Ribbed Panels	119
LAR-102	Seam Flashing – Corrugated Panels	120
LAR-103	Seam Flashing – Standing Seam Panels	121
LAR-104	Seam Flashing – J Panels	122
LAR-105	Seam Flashing – Ribbed J-Panels	123
LAR-106	Ridge Cap Flashing	124
LAR-201	Metal Roof Edge Fascia Cap Flashing	125
LAR-301	Wall Flashing- Over Non Metal Systems	126
LAR-302	Equipment Curb Flashing	127
LAR-303	Skylight Curb	128
LAR-304	HVAC Curb/Scuttle Hatch Flashing	129
LAR-401	Control Joint - Concrete Deck	130
LAR-501	Pipe Flashing - Over Sprayed Polyurethane Foam	131
LAR-502	Pipe Flashing	132
LAR-503	Penetration Pocket Double Penetration	133
LAR-504	Standard Drain Flashing	134
LAR-505	Drain Flashing - Over Sprayed Polyurethane Foam	135
LAR-506	Flush Skylight	136

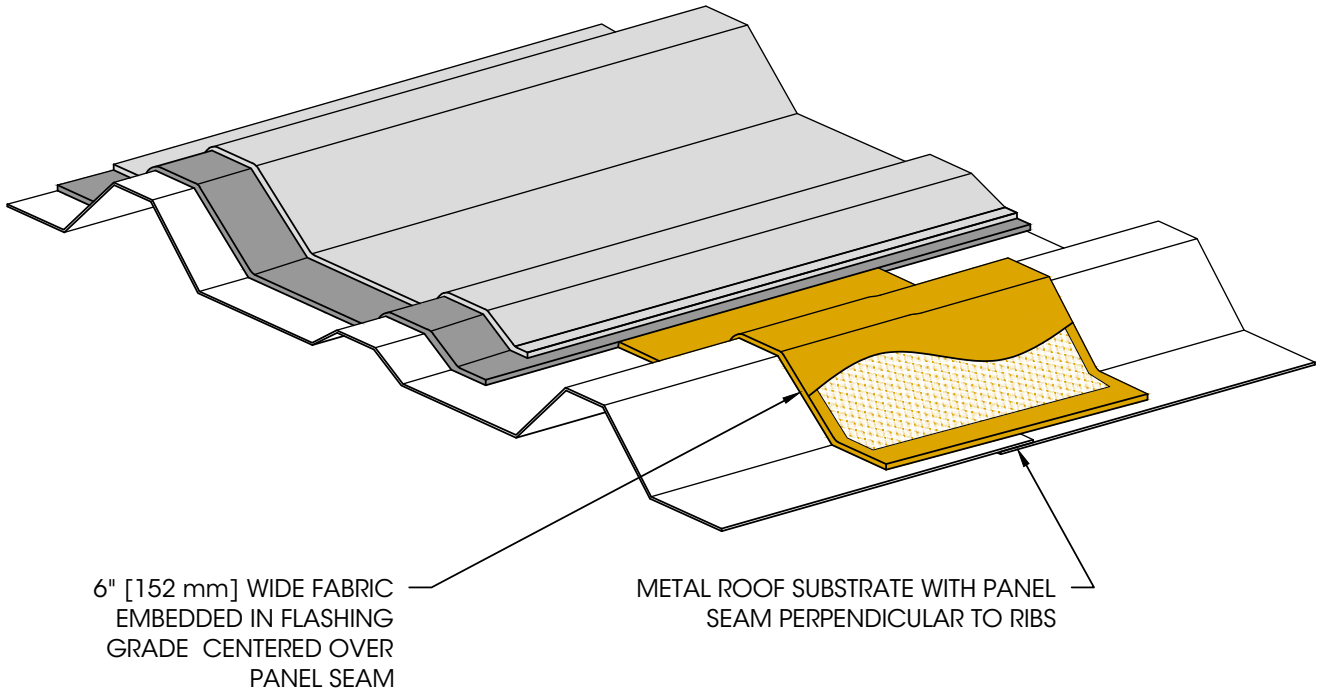

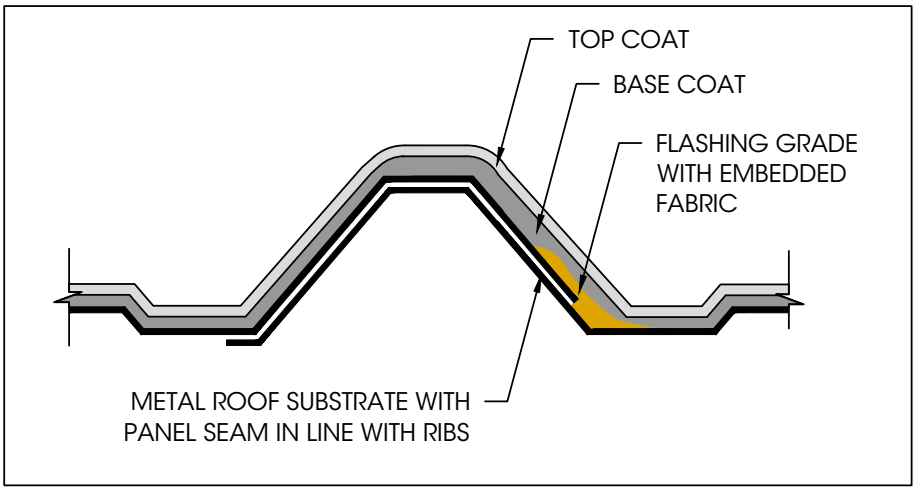

Notes:

1. Refer to specific coating system for base coat and top coat products.
2. For seam treatment, refer to seam treatment guide.
3. 12" (305 mm) required at perimeter and transition seam.

LEGEND	Seam Flashing - Ribbed Panels	Roof Area: Field of Roof		Detail No:
Top coat Base coat Flashing Grade		Issue Date: 6/13/23	Scale: N.T.S.	101

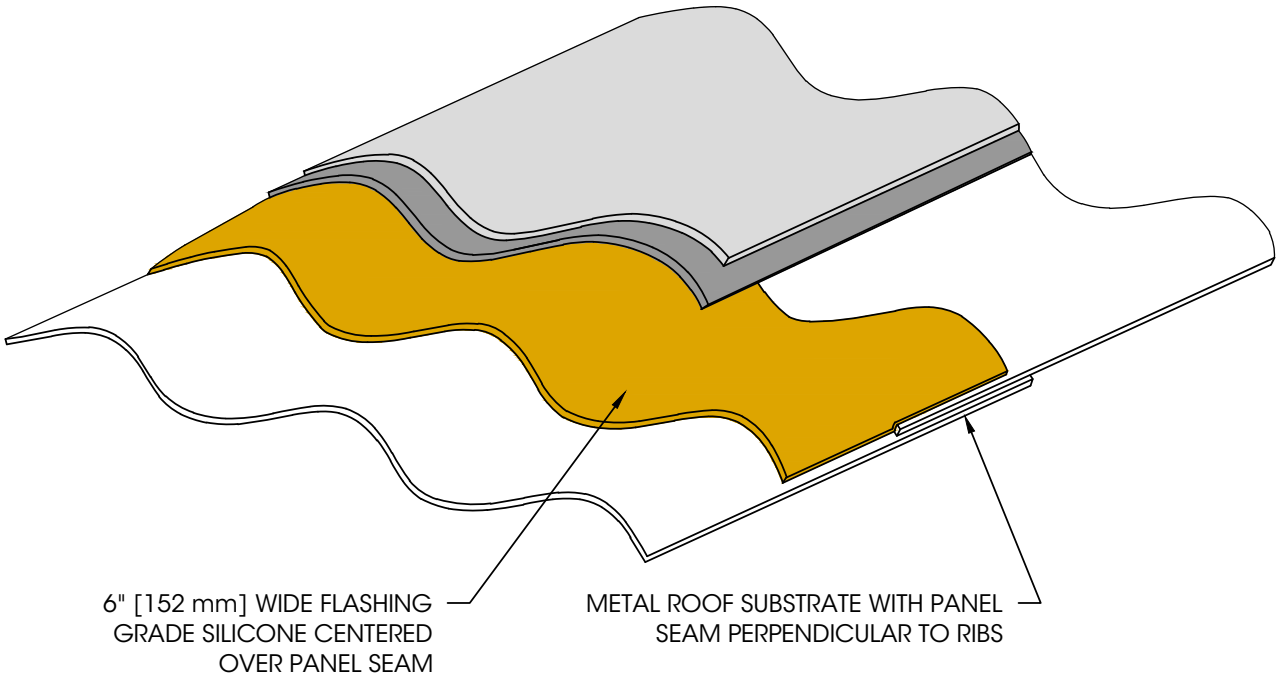

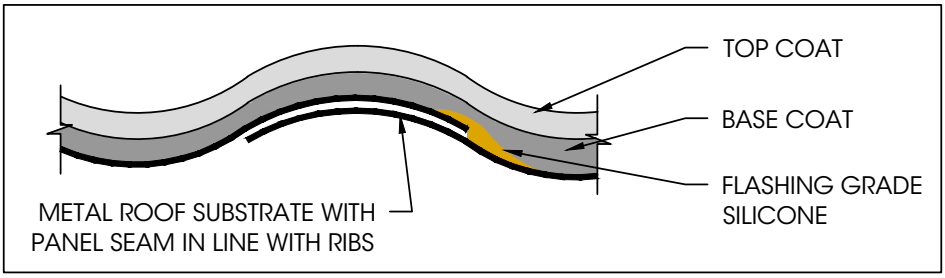

Notes:

1. Refer to specific coating system for base coat and top coat products.
2. For seam treatment, refer to seam treatment guide.
3. 12" (305 mm) required at perimeter and transition seam.

LEGEND	Seam Flashing - Corrugated Panels	Roof Area: Field of Roof		Detail No:
Top coat Base coat Flashing Grade Silicone		Issue Date: 6/13/23	Scale: N.T.S.	102

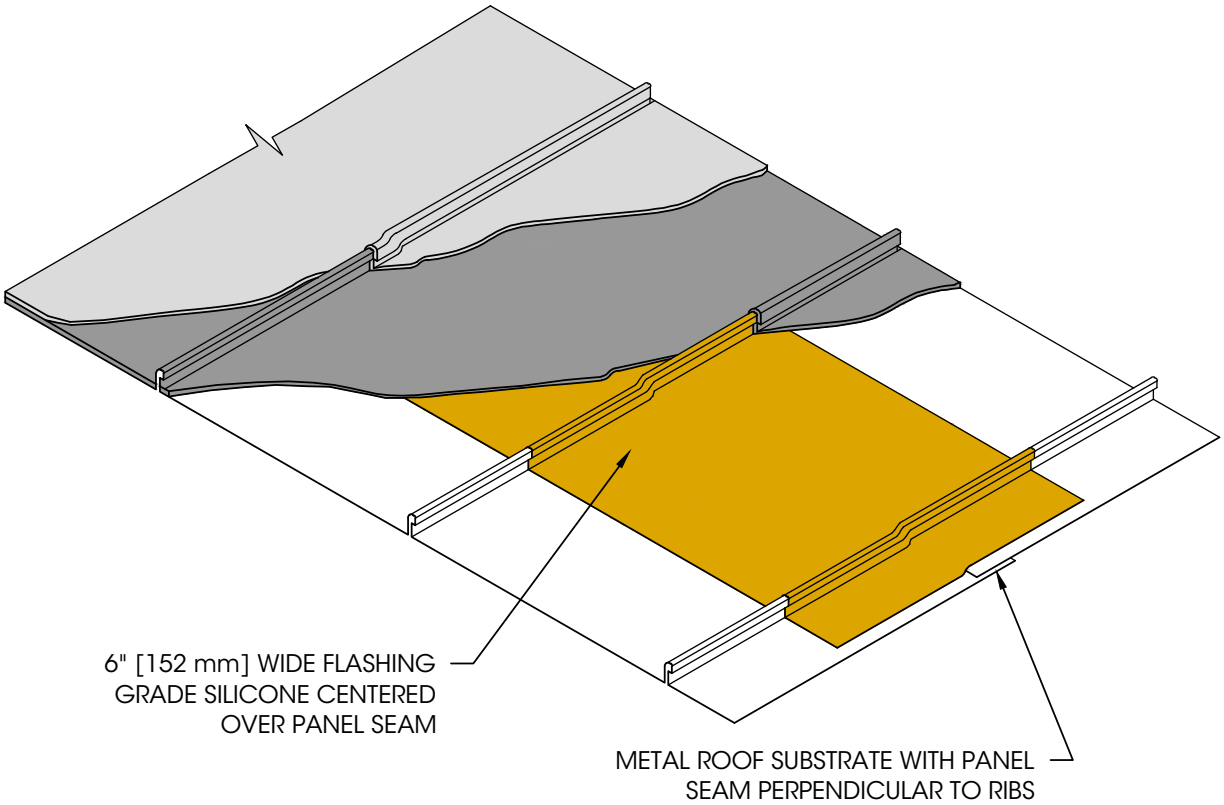

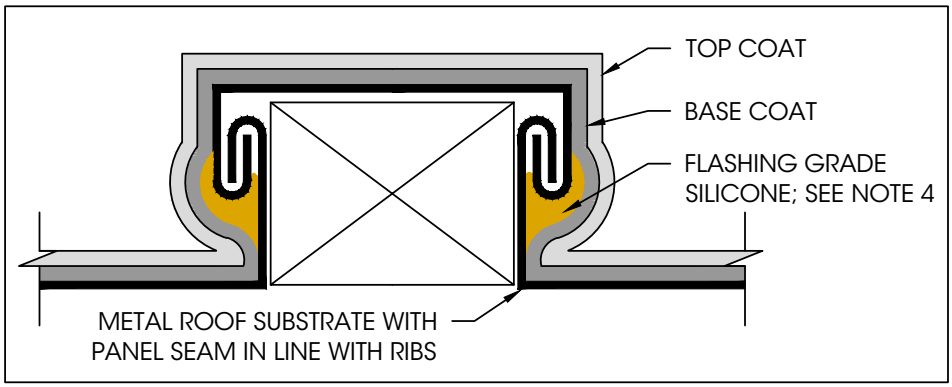

Notes:

1. Refer to specific coating system for base coat and top coat products.
2. For seam treatment, refer to seam treatment guide.
3. 12" (305 mm) required at perimeter and transition seam.
4. Vertical seams may forgo flashing grade silicone treatment if the seal/tape is intact on the seam or if they are double locked.

LEGEND	Seam Flashing - Standing Seam Panels	Roof Area: Field of Roof		Detail No:
Top coat Base coat Flashing Grade Silicone		Issue Date: 6/13/23	Scale: N.T.S.	103

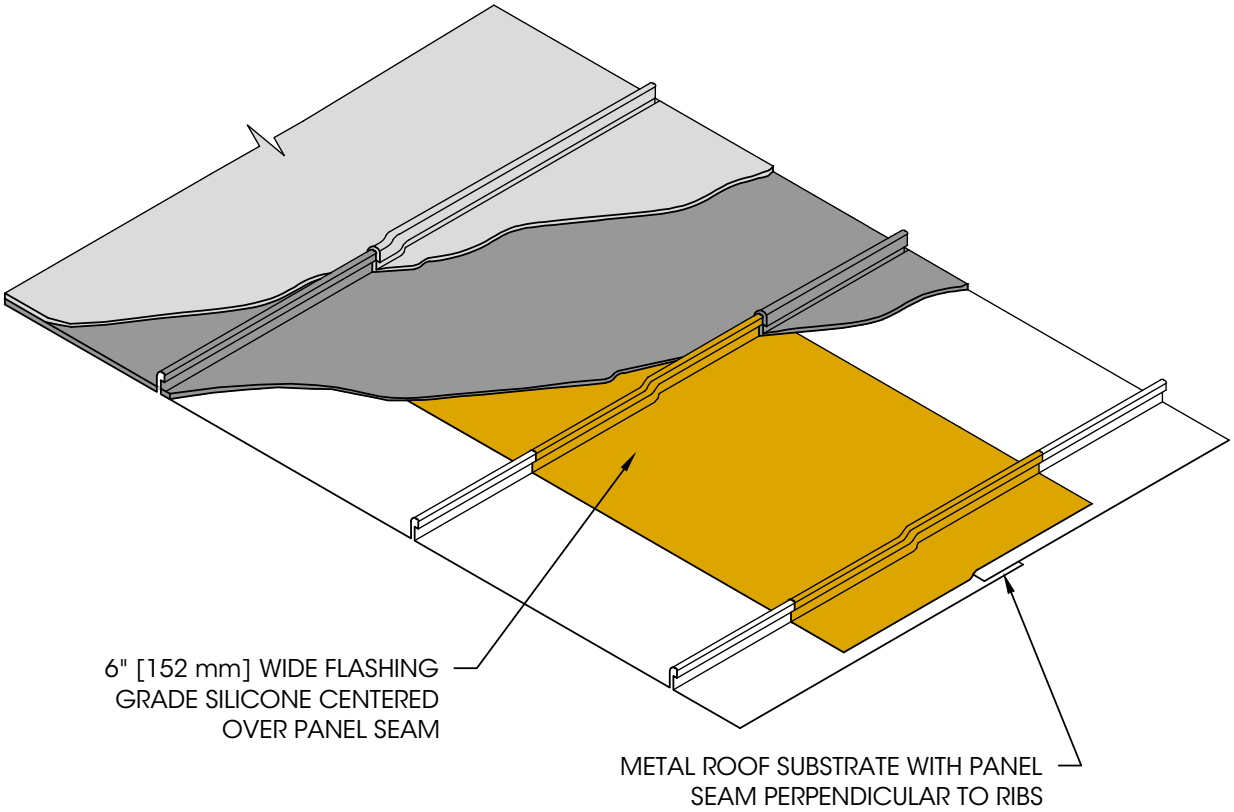

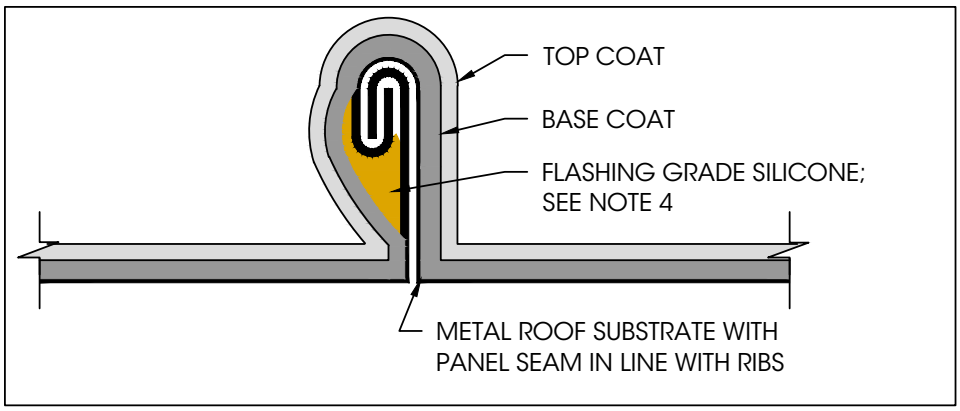

Notes:

1. Refer to specific coating system for base coat and top coat products.
2. For seam treatment, refer to seam treatment guide.
3. 12" (305 mm) required at perimeter and transition seam.
4. Vertical seams may forgo flashing grade silicone treatment if the seal/tape is intact on the seam or if they are double locked.

LEGEND	Seam Flashing - "J" Panels	Roof Area: Field of Roof		Detail No:
Top coat Base coat Flashing Grade Silicone		Issue Date: 6/13/23	Scale: N.T.S.	104

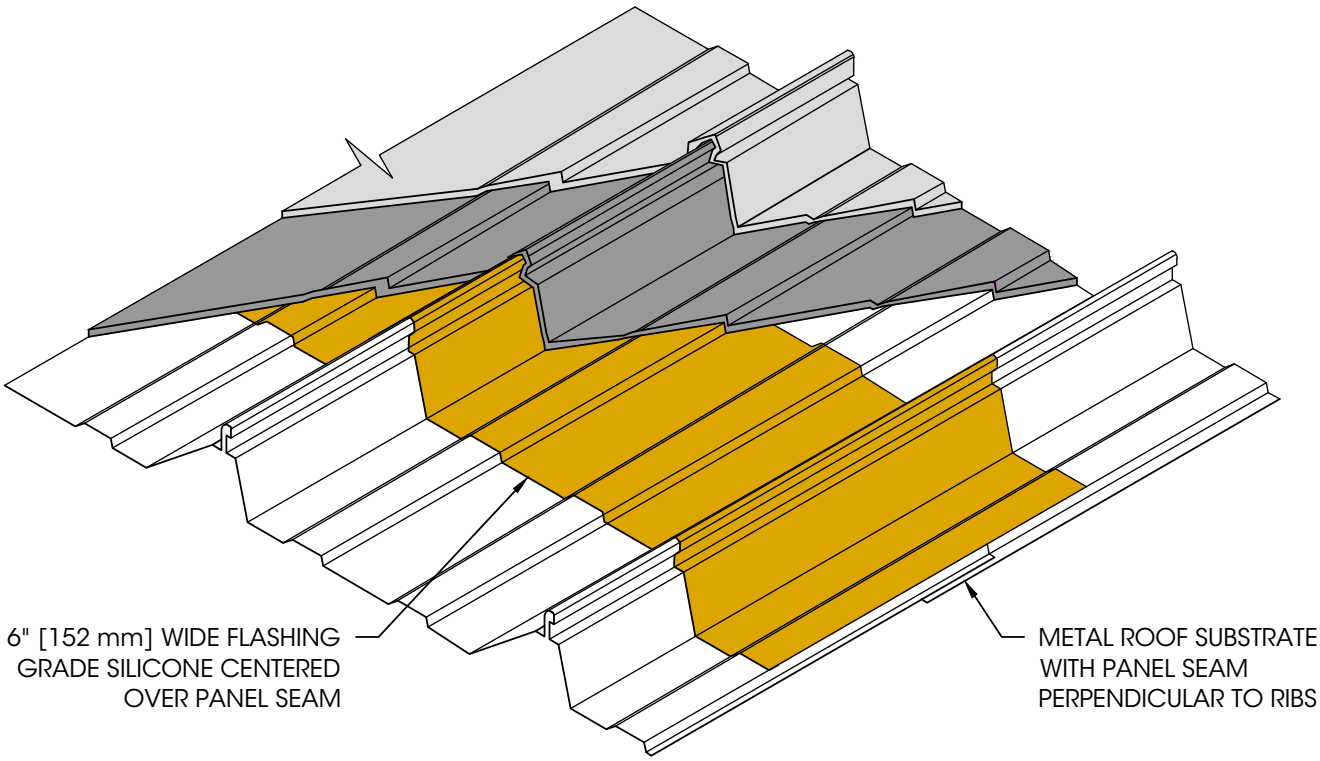

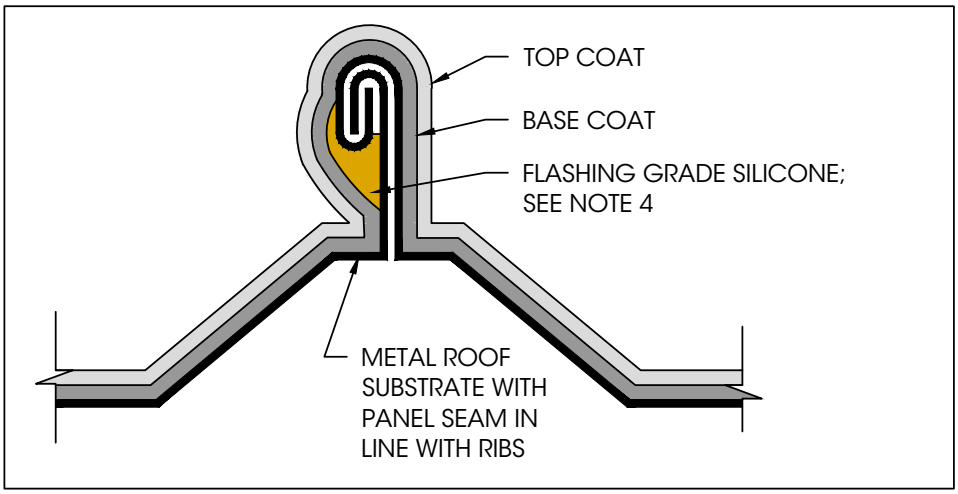

Notes:

1. Refer to specific coating system for base coat and top coat products.
2. For seam treatment, refer to seam treatment guide.
3. 12" (305 mm) required at perimeter and transition seam.
4. Vertical seams may forgo flashing grade silicone treatment if the seal/tape is intact on the seam or if they are double locked.

LEGEND	Seam Flashing - Ribbed "J" (Trapezoidal) Panels	Roof Area: Field of Roof		Detail No:
Top coat Base coat Flashing Grade Silicone		Issue Date: 6/13/23	Scale: N.T.S.	105

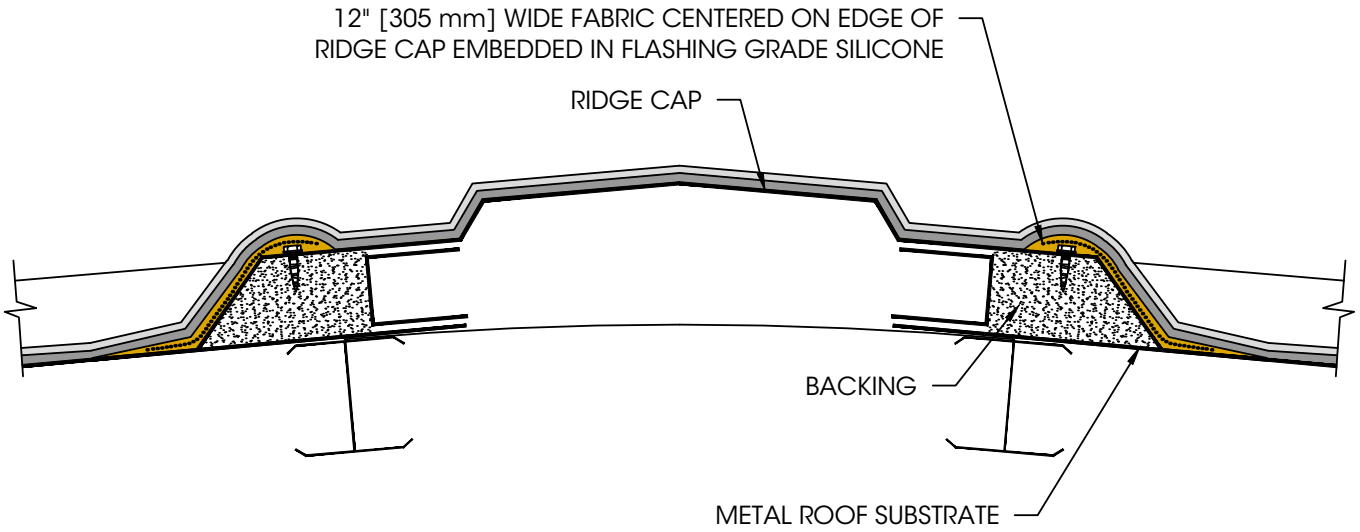

Notes:

1. Refer to specific coating system for base coat and top coat products.
2. For seam treatment, refer to seam treatment guide.

LEGEND	Ridge Cap Flashing	Roof Area: Field of Roof		Detail No:
Top coat				106
Base coat		Issue Date: 6/13/23	Scale: N.T.S.	
Flashing Grade Silicone				

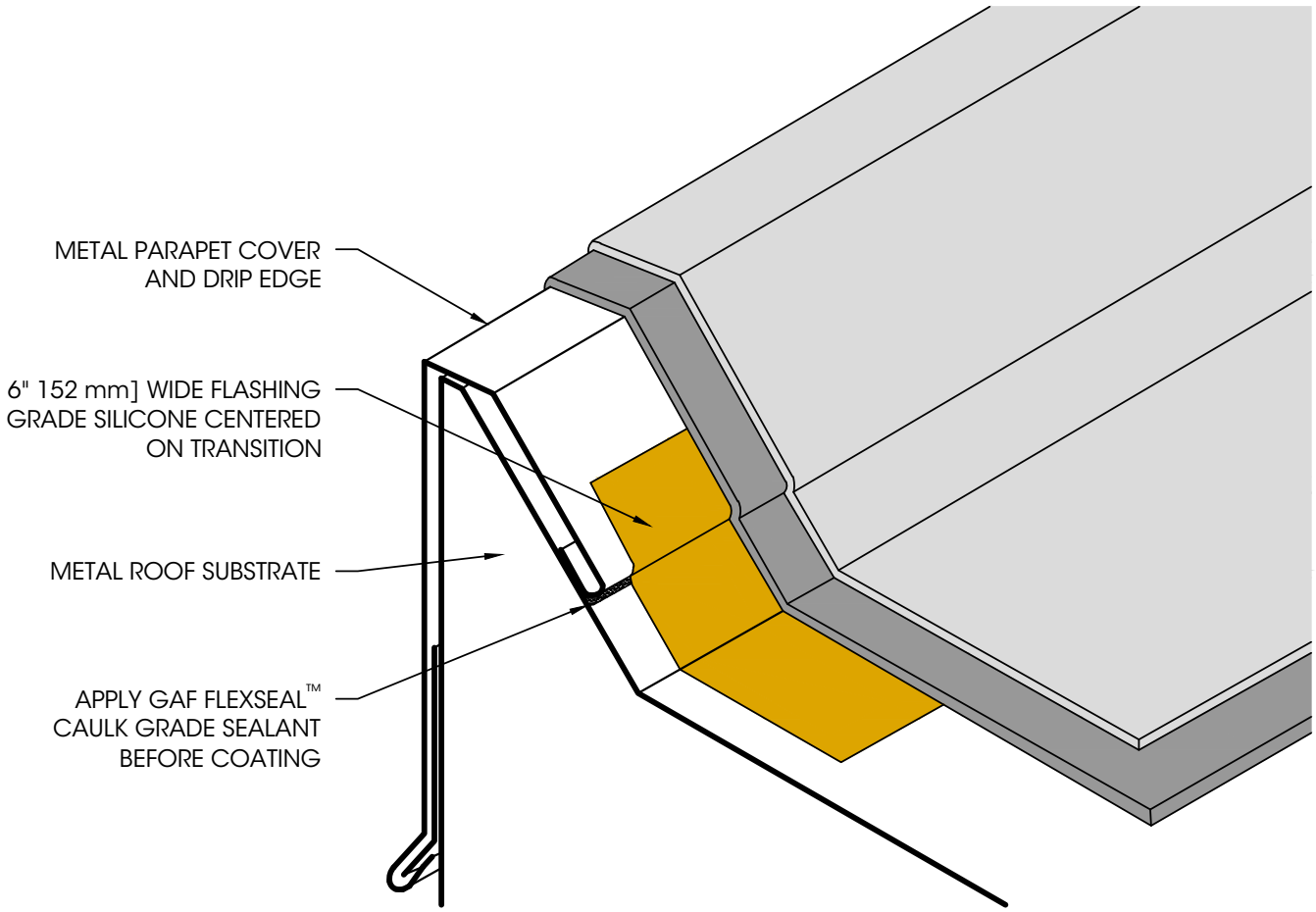

Notes:

1. Refer to specific coating system for base coat and top coat products.

LEGEND	Metal Roof Edge Fascia Cap Flashing	Roof Area: Roof Edge		Detail No:
Top coat		Issue Date: 6/13/23	Scale: N.T.S.	201
Base coat				
Flashing Grade Silicone				

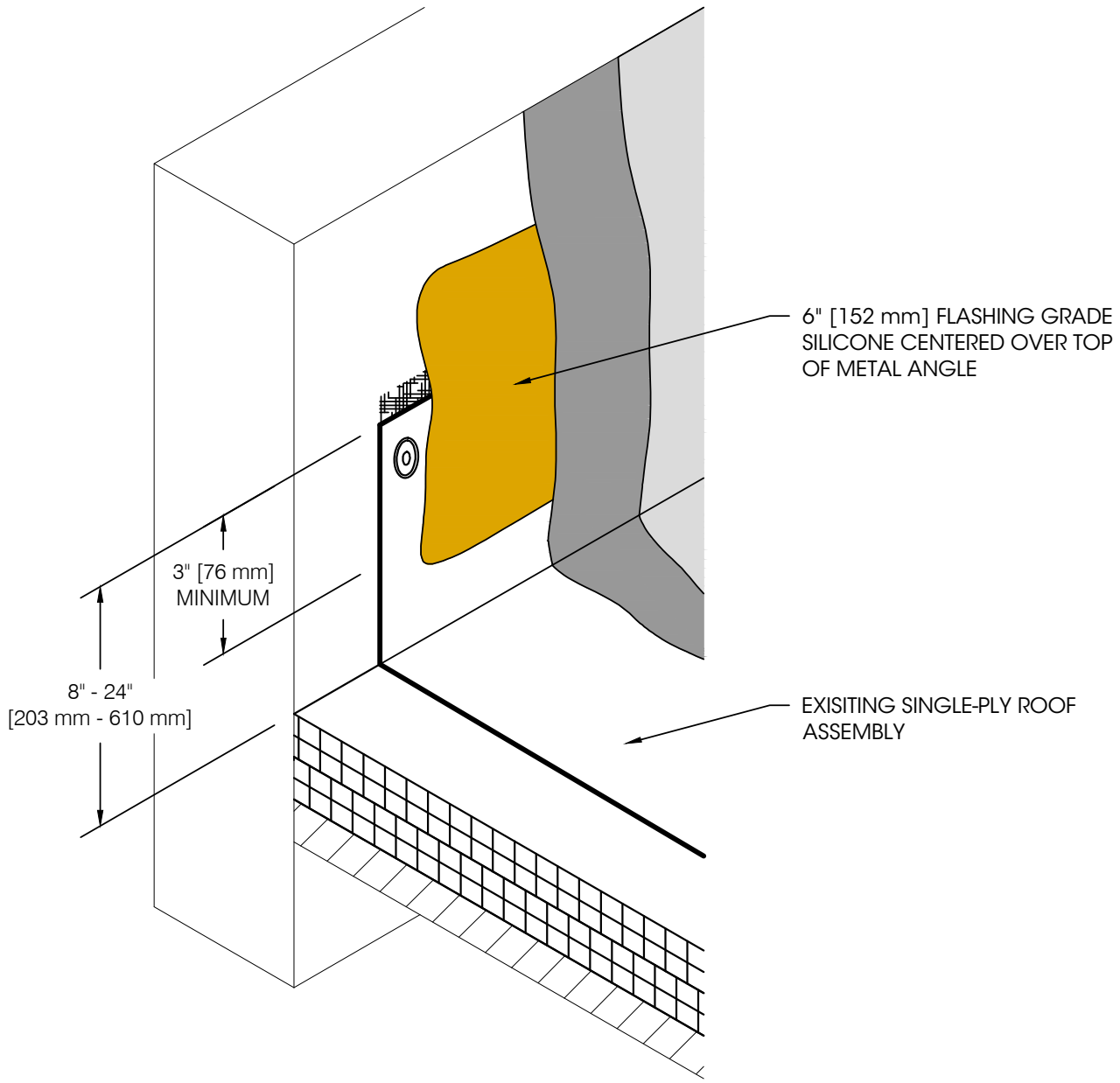

Notes:

1. Refer to specific coating system for base coat and top coat products.
2. Remove counterflashing prior to detail application.

LEGEND	Wall Flashing Over Non-metal Roof System	Roof Area: Wall & Curb		Detail No:
Top coat		Issue Date: 6/13/23	Scale: N.T.S.	301
Base coat				
Flashing Grade Silicone				

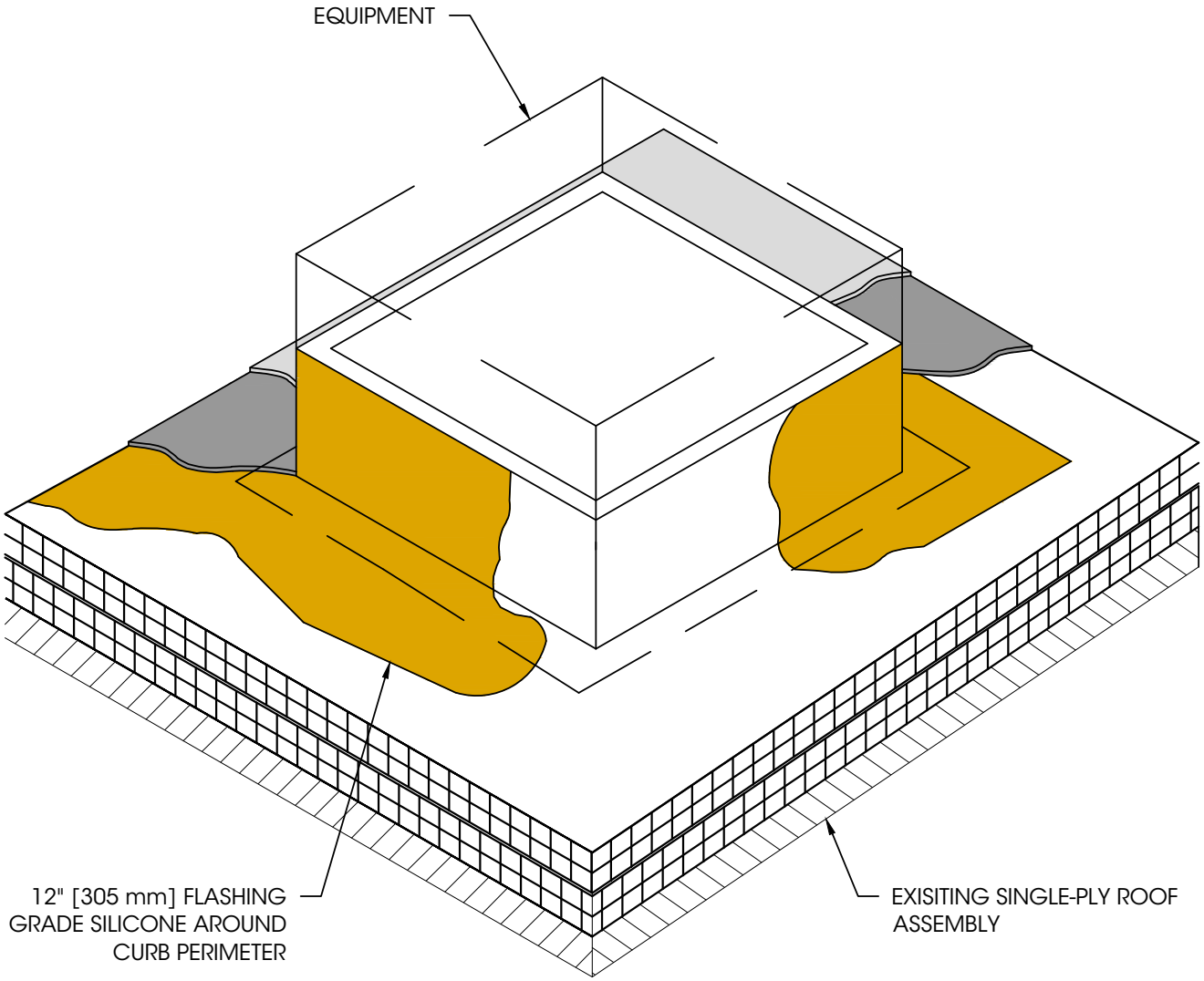

Notes:

1. Refer to specific coating system for base coat and top coat products.
2. New crickets shall be "sealed" by placing a bead of flashing grade silicone under the flanges before they are mechanically attached.

LEGEND	Equipment Curb Flashing	Roof Area: Wall & Curb		Detail No:
Top coat Base coat Flashing Grade Silicone		Issue Date: 6/13/23	Scale: N.T.S.	302

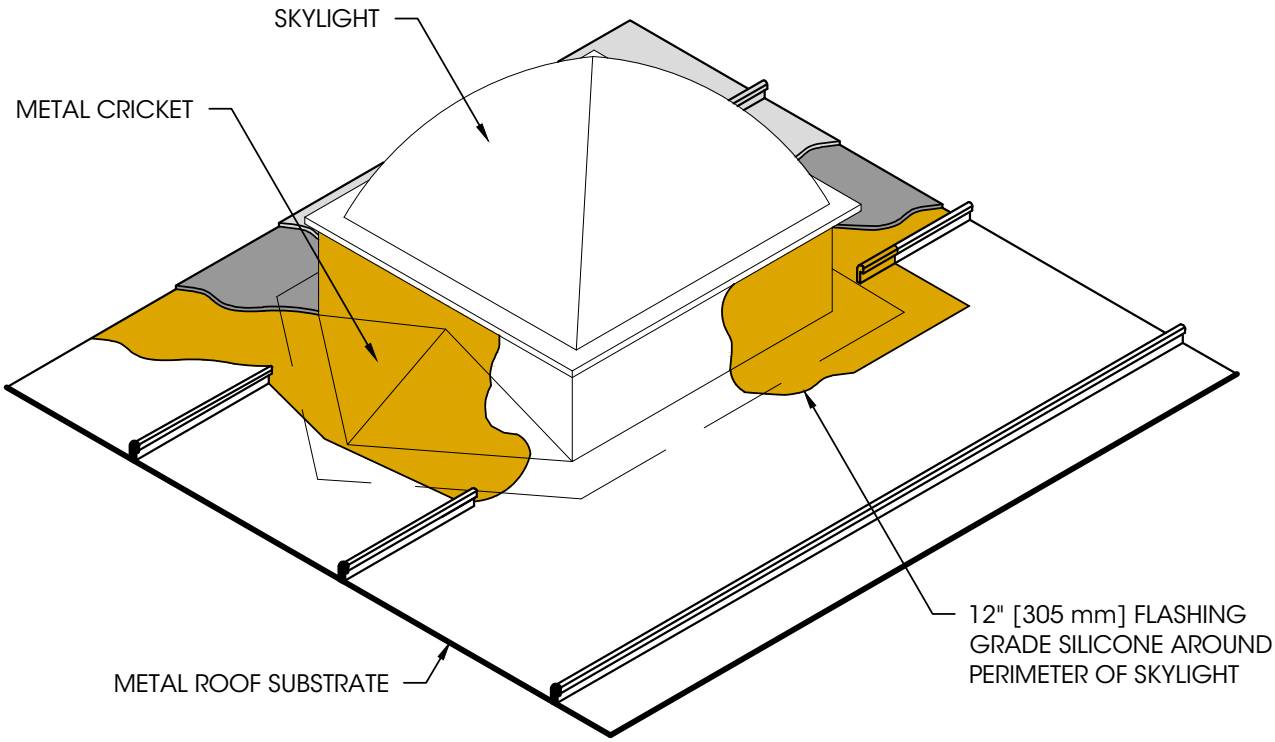

Notes:

1. Refer to specific coating system for base coat and top coat products.
2. New crickets shall be "sealed" by placing a bead of flashing grade silicone under the flanges before they are mechanically attached.

LEGEND	Skylight Curb Flashing	Roof Area: Wall & Curb		Detail No:
Top coat Base coat Flashing Grade Silicone		Issue Date: 6/13/23	Scale: N.T.S.	303

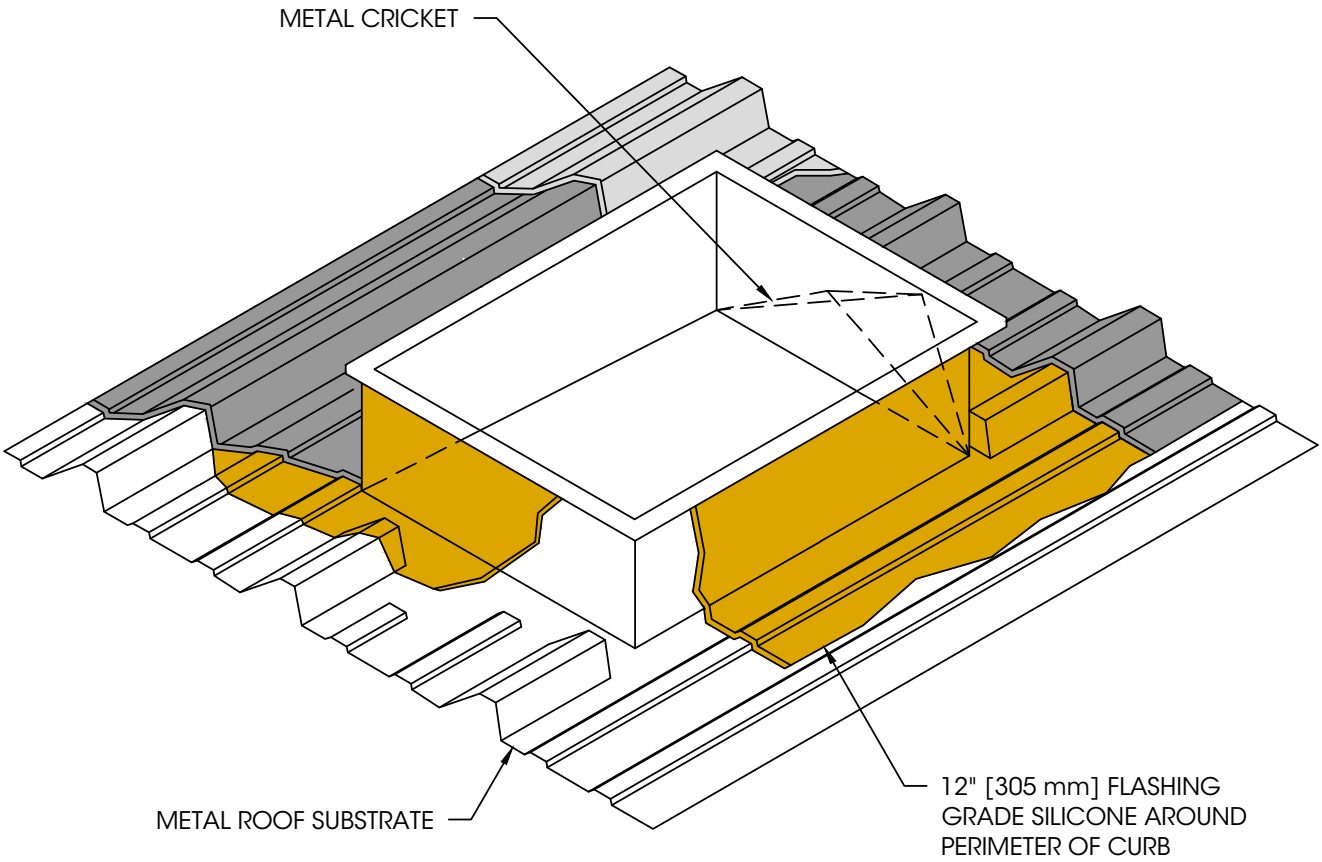

Notes:

1. Refer to specific coating system for base coat and top coat products.
2. New crickets shall be "sealed" by placing a bead of flashing grade silicone under the flanges before they are mechanically attached.

LEGEND	HVAC Curb / Scuttle Hatch Flashing	Roof Area: Wall & Curb		Detail No:
Top coat Base coat Flashing Grade Silicone		Issue Date: 6/13/23	Scale: N.T.S.	304

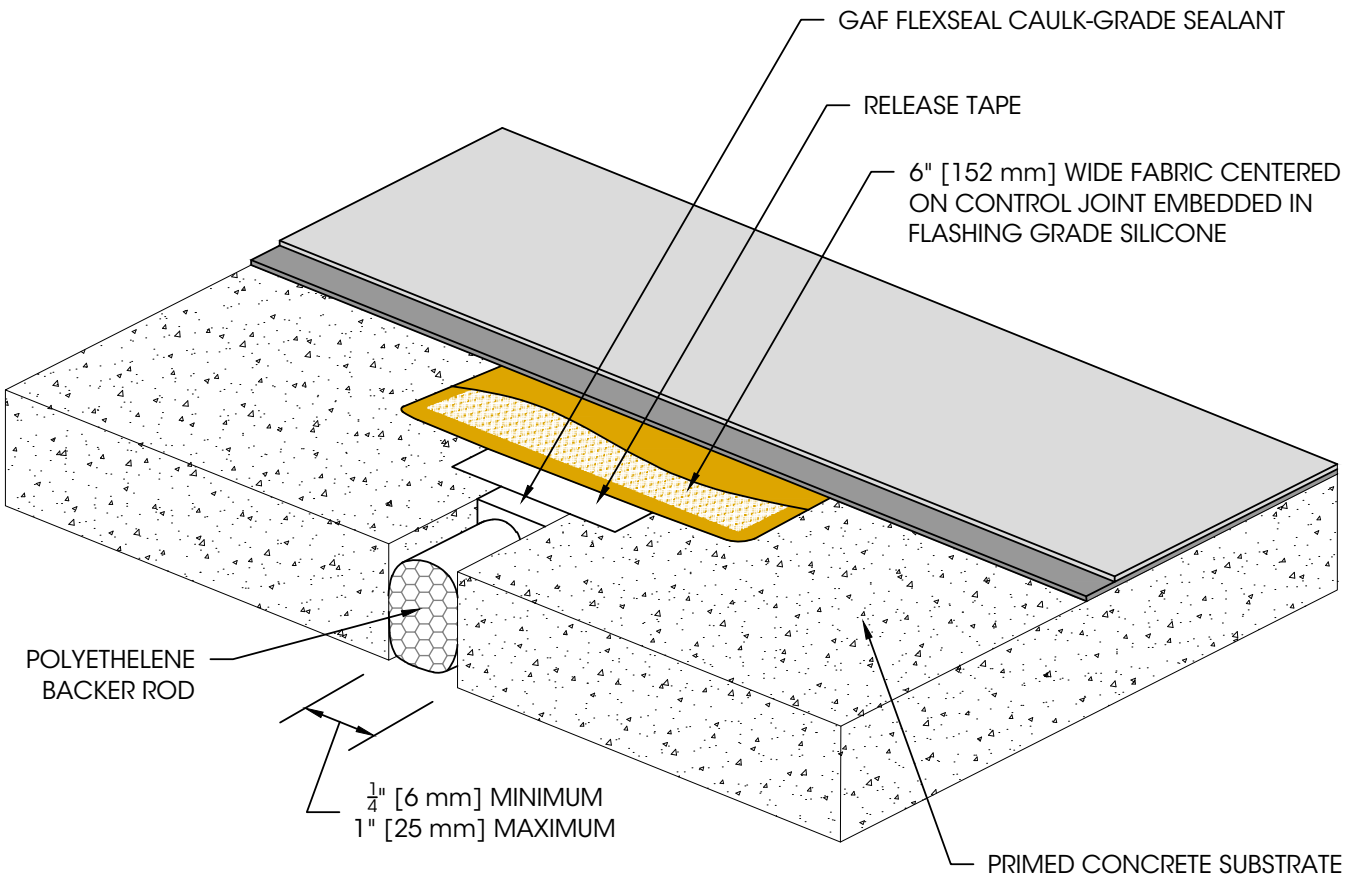

Notes:

1. Refer to specific coating system for base coat and top coat products.

LEGEND	Flashing at Concrete Deck Control Joint	Roof Area: Expansion Joints		Detail No:
Top coat		Issue Date: 6/13/23	Scale: N.T.S.	401
Base coat				
Flashing Grade Silicone				

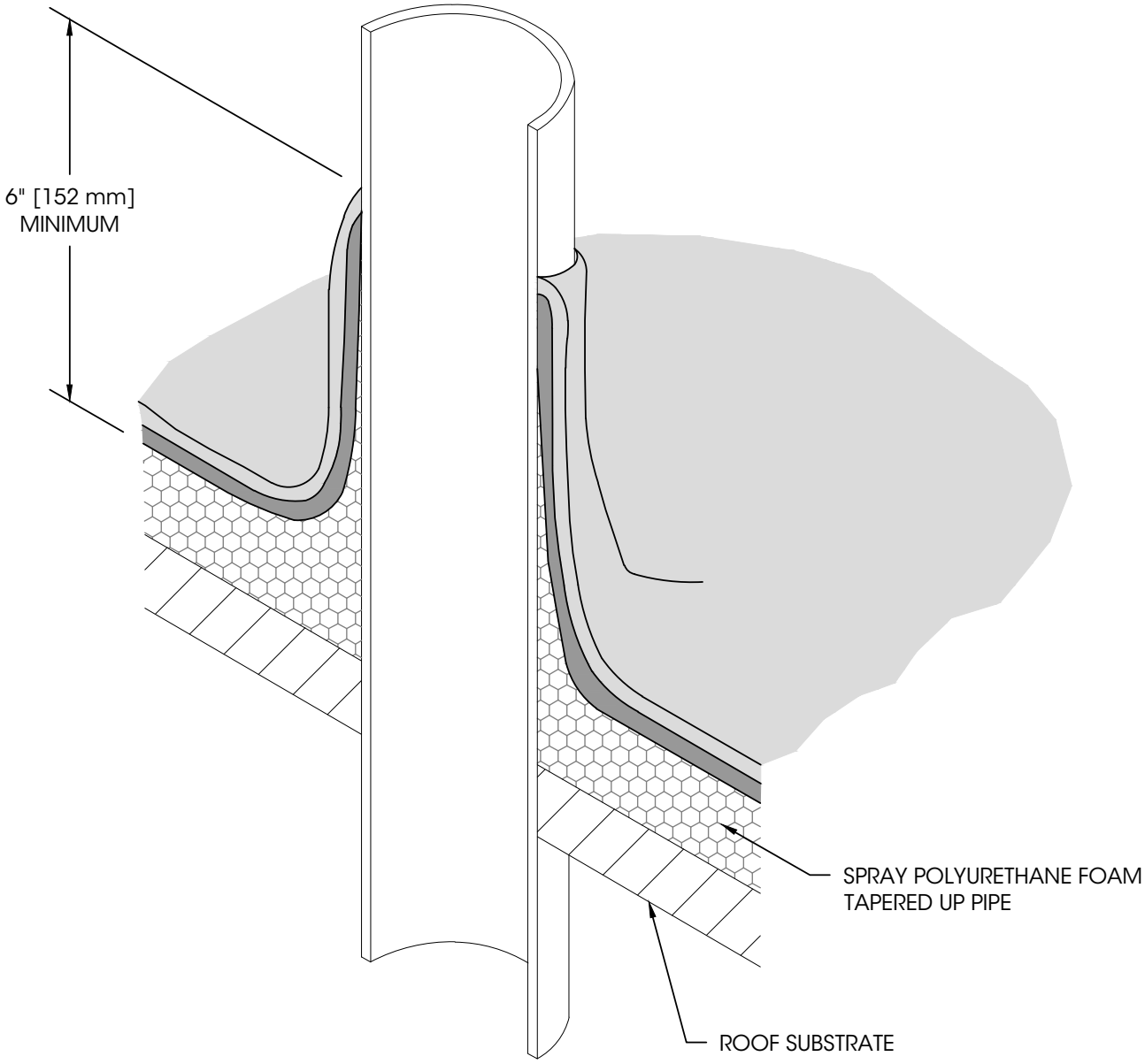

Notes:

1. Refer to specific coating system for base coat and top coat products.

LEGEND	Pipe Flashing Over Spray Polyurethane Foam	Roof Area: Penetrations		Detail No:
Top coat Base coat		Issue Date: 6/13/23	Scale: N.T.S.	501

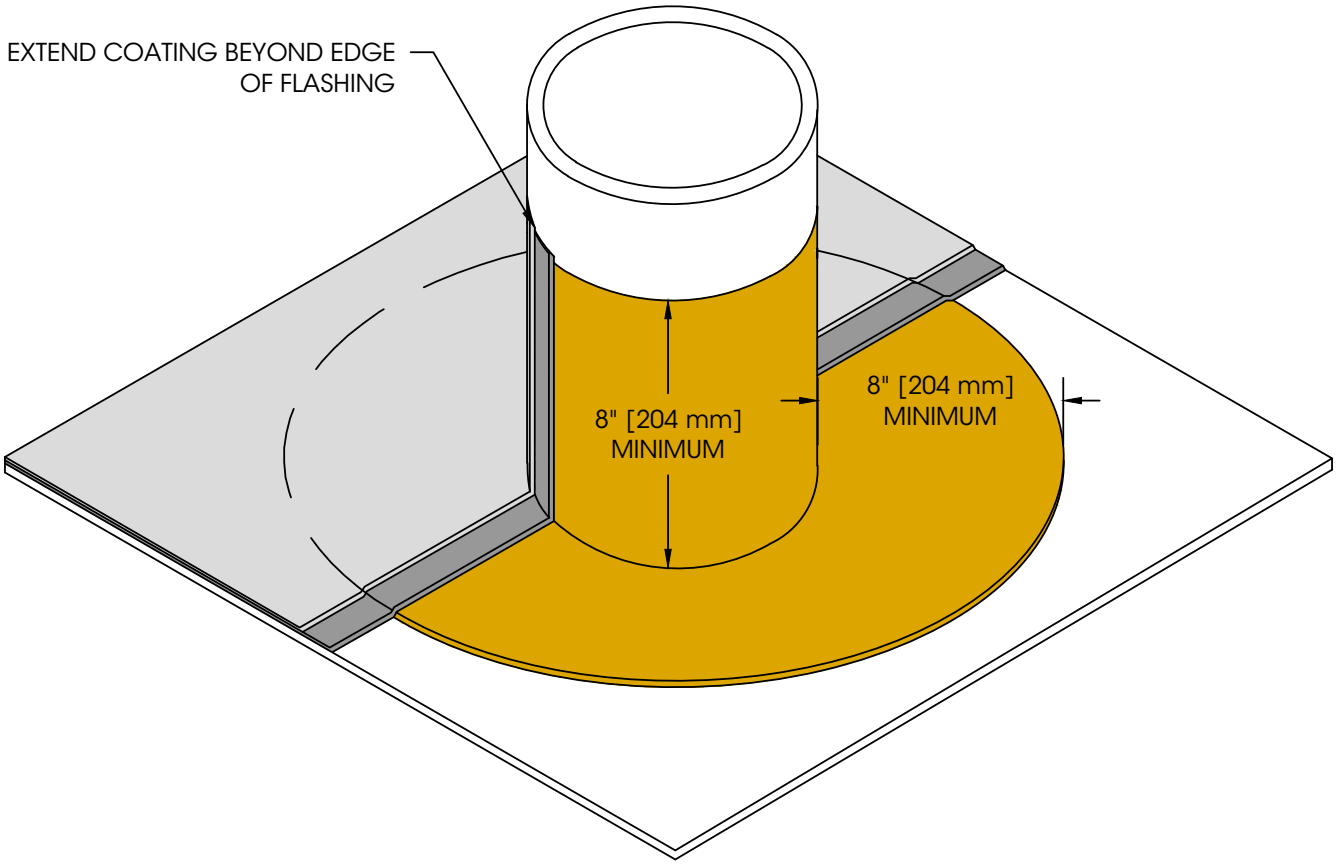

Notes:

1. Refer to specific coating system for base coat and top coat products.
2. For tight-fitting penetrations only. Loose-fitting penetrations require fabric; See acrylic coating details.

LEGEND	Pipe Flashing	Roof Area: Penetrations		Detail No:
Top coat Base coat Flashing Grade Silicone		Issue Date: 6/13/23	Scale: N.T.S.	502

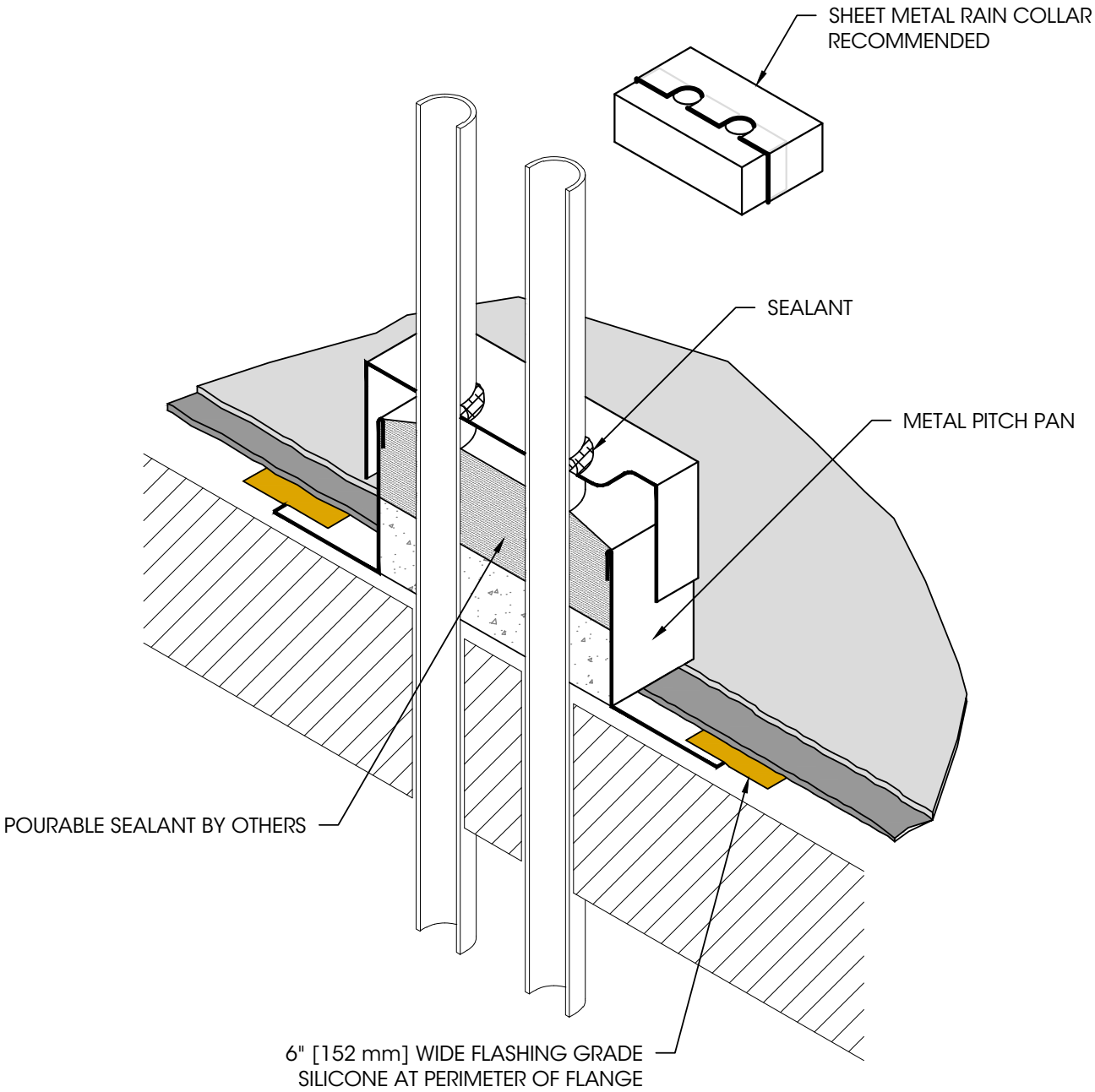

Notes:

1. Refer to specific coating system for base coat and top coat products.
2. For tight-fitting penetrations only. Loose-fitting penetrations require fabric; See acrylic coating details.

LEGEND	Penetration Pocket - Double Penetration	Roof Area: Penetrations		Detail No:
Top coat		Issue Date: 6/13/23	Scale: N.T.S.	503
Base coat				
Flashing Grade Silicone				

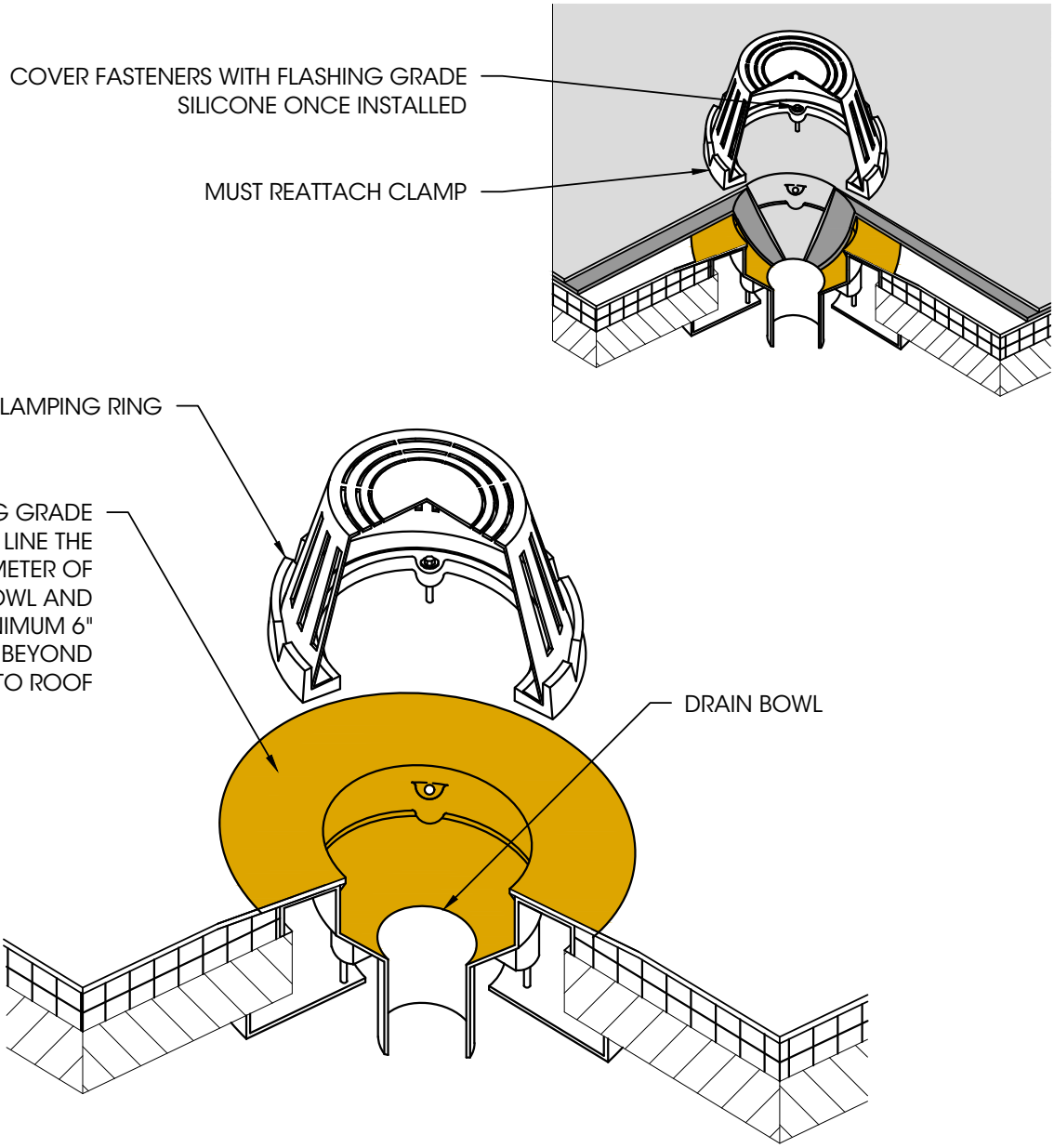

Notes:

1. Refer to specific coating system for base coat and top coat products.

LEGEND	Standard Drain Flashing	Roof Area: Penetrations		Detail No:
Top coat				504
Base coat		Issue Date: 6/13/23	Scale: N.T.S.	
Flashing Grade Silicone				

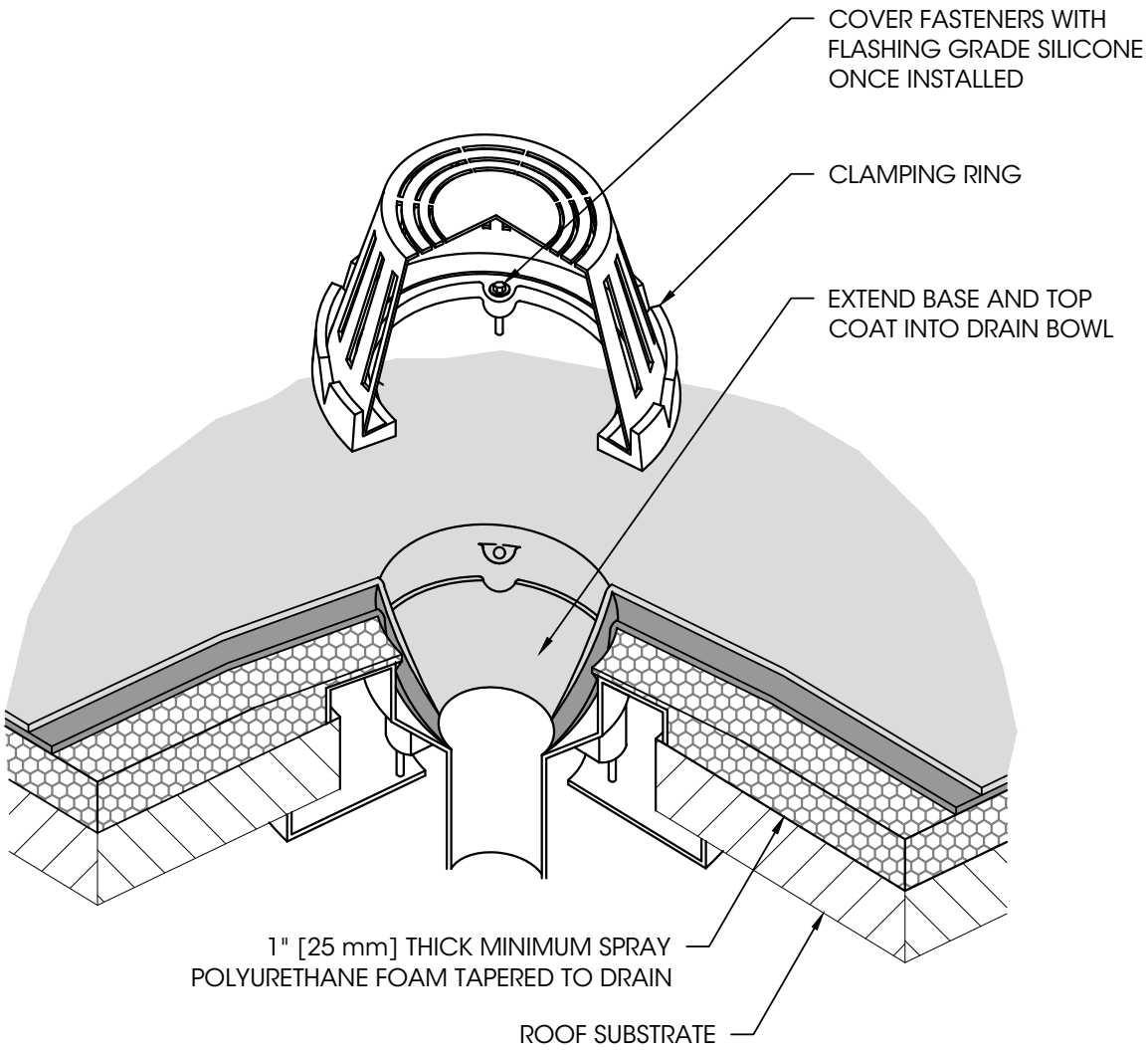

Notes:

1. Refer to specific coating system for base coat and top coat products.
2. Affix drain strainer to top coat with compatible sealant.

LEGEND	Drain Flashing Over Spray Polyurethane Foam	Roof Area: Penetrations		Detail No:
Top coat Base coat		Issue Date: 6/13/23	Scale: N.T.S.	505

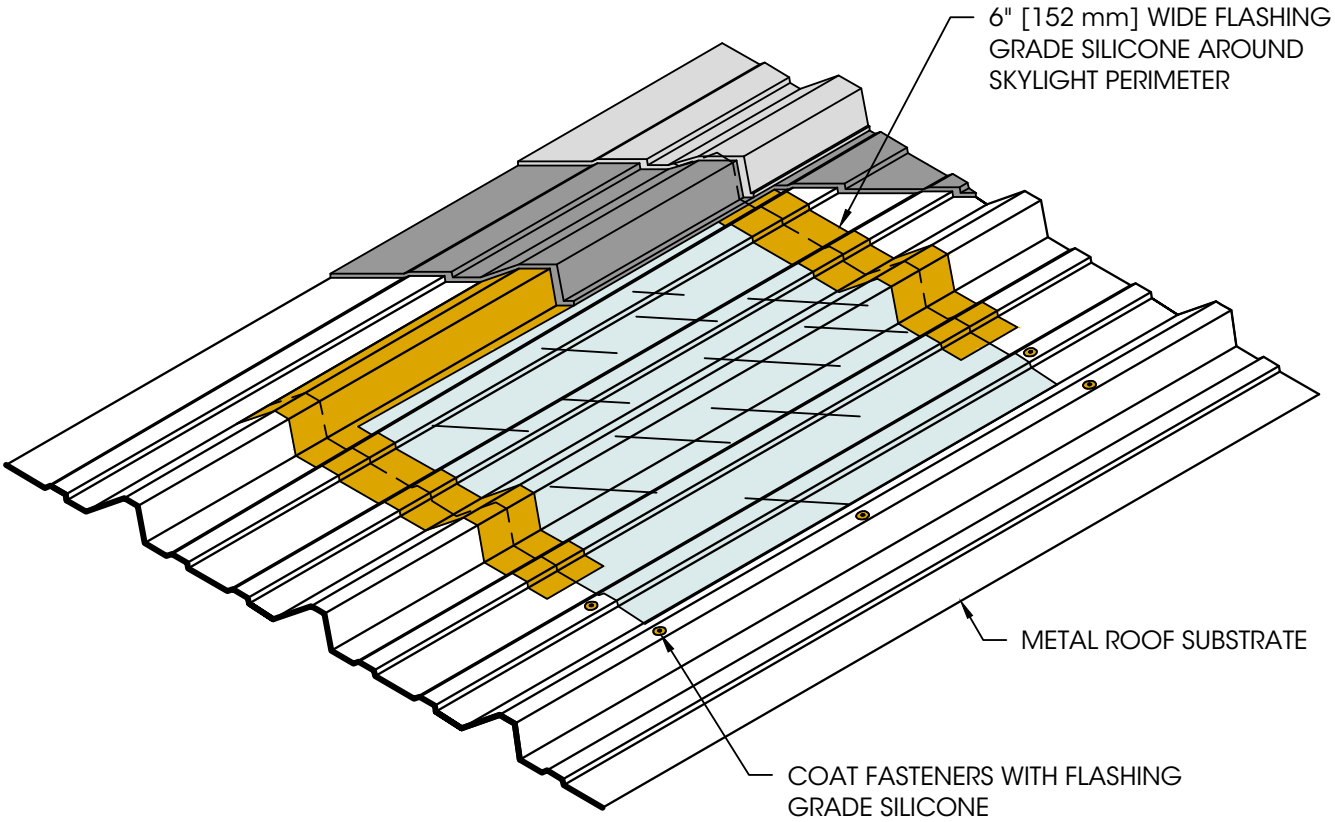

Notes:

1. Refer to specific coating system for base coat and top coat products.
2. Do not use coatings to cover skylights.

LEGEND	Flush Skylight Flashing	Roof Area: Penetrations		Detail No:
Top coat Base coat Flashing Grade Silicone		Issue Date: 6/13/23	Scale: N.T.S.	506

GAF RoofCoatings

gaf.com/coatings

©2024 GAF • COMCO180-PDF-0124